PARTS CATALOG

OPERATION — MAINTENANCE — SET-UP INSTRUCTIONS

MODELS HWTF9, HWTF10 AND HWTF11 TANDEM DISK HARROW

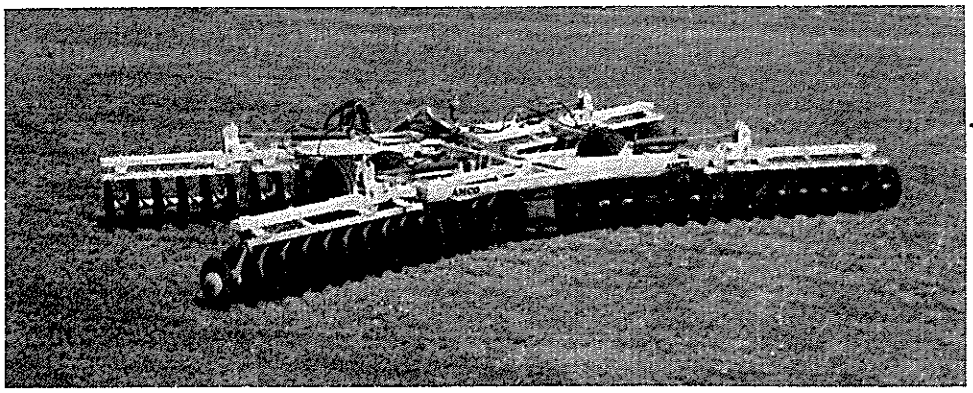

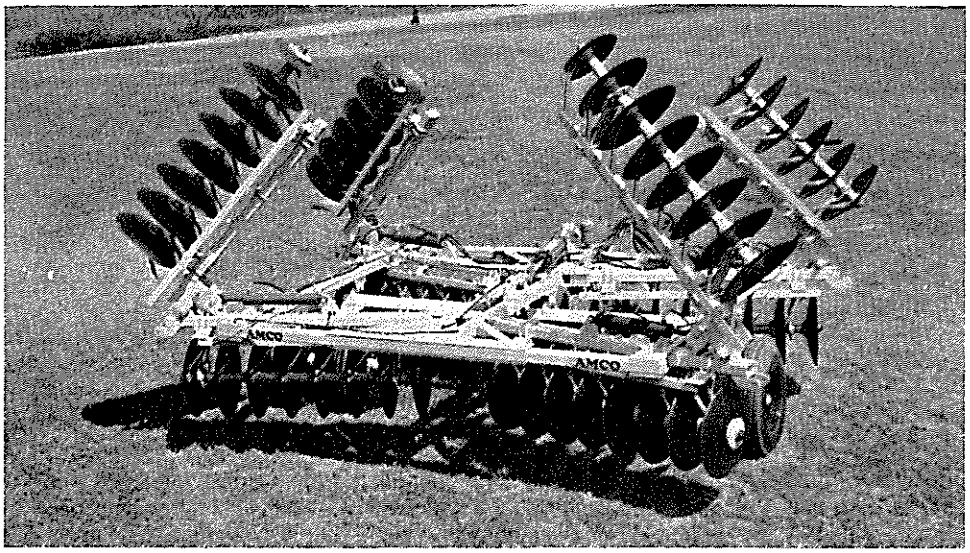

PRODUCTS

Portable Elevator Division, Dynamics Corporation of America
No. 1 AMCO Drive, Yazoo City, Mississippi 39194 / 601/746-4464

TO THE PURCHASER

The care you give your new AMCO Model HWTF 10 and 11 Series Disk Harrow will greatly determine the satisfaction and service you will obtain from it. Use this manual as your guide. By observing the instructions and suggestions in this manual, your AMCO Disk Harrow will serve you well for many years.

As an authorized AMCO Dealer, we stock genuine AMCO parts which are manufactured with the same precision and skill as the original equipment. Our factory-trained staff is kept well informed on the best methods of servicing AMCO equipment and is ready and able to help you.

Should you require additional aid or information, please contact us.

YOUR AUTHORIZED AMCO DEALER

To insure efficient and prompt service, please furnish us with the Model and Serial Number of your AMCO Disk Harrow in all correspondence or other contacts.

GENERAL SPECIFICATIONS

HWTF10 — FLANGETTE MOUNTED GANG BEARINGS

Model	Cutting Width	No. of Blades	Transport Width	Approximate Weight Pounds
HWTF10-5422-PBG	20'0"	54	16'0"	6174
HWTF10-5822-PBG	21'6"	58	16'0"	6381
HWTF10-6222-PBG	23'0"	62	16'0"	6604

With 22" Dia. x 3/16 Plain Blades

DISK BLADE OPTIONS
22" Dia. x 3/16 Cut Out Blades

HWTF11 — TOGGLE MOUNTED GANG BEARINGS

Model	Cutting Width	No. of Blades	Transport Width	Approximate Weight Pounds
HWTF11-5422-PBG	20'0"	54	16'0"	6339
HWTF11-5822-PBG	21'6"	58	16'0"	6550
HWTF11-6222-PBG	23'6"	62	16'0"	6700

With 22" Dia. x 3/16 Plain Blades

DISK BLADE OPTIONS
22" Dia. x 3/16 Cut Out
22" Dia. x 1/4 Plain
22" Dia. x 1/4 Cut Out
24" Dia. x 3/16 Plain
24" Dia. x 3/16 Cut Out

TABLE OF CONTENTS

To the Purchaser i

General Specifications i

Table of Contents 1

PARTS LIST

Hitch 3

Main Frame 5

Rockshaft 7

Center Tooth Attachment 9

Gang Rest 9

Wing Lock 9

Hydraulic Circuit — HWTF9 11

Hydraulic Circuit — HWTF10 & 11 13

Pressure Lock Valve 13

Hydraulic Cylinder — 3 x 16 15

Hydraulic Cylinder — 4 x 8 15

Front Inside Gang — HWTF9 17

Rear Inside Gang — HWTF9 19

Front Wing Gang — HWTF9 21

Rear Wing Gang — HWTF9 23

Front Inside Gang — HWTF10 25

Rear Inside Gang — HWTF10 27

Front Wing Gang — HWTF10 29

Rear Wing Gang — HWTF10 31

Front Inside Gang — HWTF11 33

Rear Inside Gang — HWTF11 35

Front Wing Gang — HWTF11 37

Rear Wing Gang — HWTF11 39

Decals 40

OPERATORS MANUAL

Safety Instructions 41

General Torque Specifications 42

Lubrication

Gang Bearings 43

Rockshaft Retainer Pins 43

Wheel Bearing 43

Stabilizer 44

Operating Instructions

Adjustment for Level Disking 45

Center Ridge 45

Center Furrow 45

Feathering Blades 45

Ground Speed and Adjustments 45

Tractor Speed 45

Hitch Adjustment 45

Disk Gang Angle Adjustment 46

Gang Lateral Adjustment 47

Wing Gangs 47

Scrapers 49

Hydraulic Cylinder 49

Center Tooth Attachment 49

Transport 50

Storage 50

Warning Reflectors 50

SMV Emblem 50

Warning Lamp 50

Maintenance 51

Assembly 55

HITCH

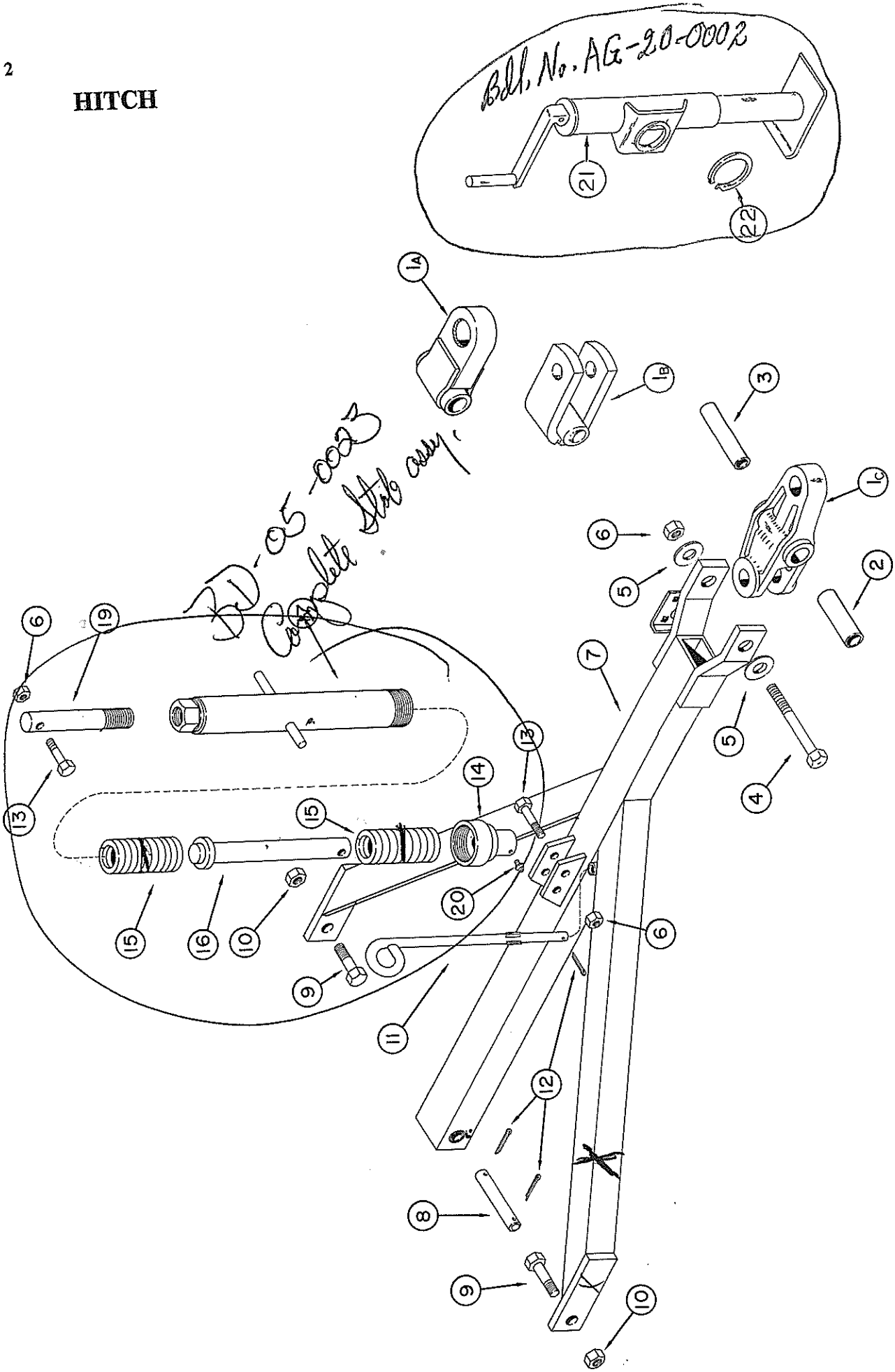
Bdl. No. AG-20-0002
BD-05-0023
Complete Stab assy.
1A
1B
1C
2
3
4
5
6
7
8
9
10
11
12
13
14
15
16
19
20
21
22

AMCO HWTF9, 10 & 11 SERIES DISK HARROW HITCH

Ref. No.	Part No.	Description	No. Req'd
1A	0550	**Clevis** — Bar Type (optional)	1
1B	0434	**Clevis** — Yoke Type	1
1C	16001	**Clevis** — Pull HWTF 10 & 11	1
2	9204	**Bushing** — Clevis	1
3	9205	**Bushing** — Clevis	1
4	10865	**Machine Bolt** 3/4 x 9 NC, PL	1
5	10866	**Washer** 3/4 PL	2
6	10300	**Nut** — Lock 3/4 NC, PL	3
7	0608	**Tongue** — Pull	1
8	5396	**Pivot Pin**	1
9	10373	**Hex Bolt** 1 x 3-1/2 NC, PL	2
10	10868	**Lock Nut** 1 NC	2
11	100061	**Hose Holder**	1
12	10075	**Cotter Pin** 1/4 x 1-1/2	3
13	10320	**Machine Bolt** 3/4 x 3-1/2 NC, PL	2
14	1166	**Cap**	1
15	10460	**Spring**	2
16	1167	**Piston Rod**	1
17	1479	**Spring Housing**	1
19	5403	**Rod** — Stud Threaded	1
20	11081	**Grease Fitting**	1
21	10883	**Jack**	1
22	10912	**Ring** — Snap	1

MAIN FRAME

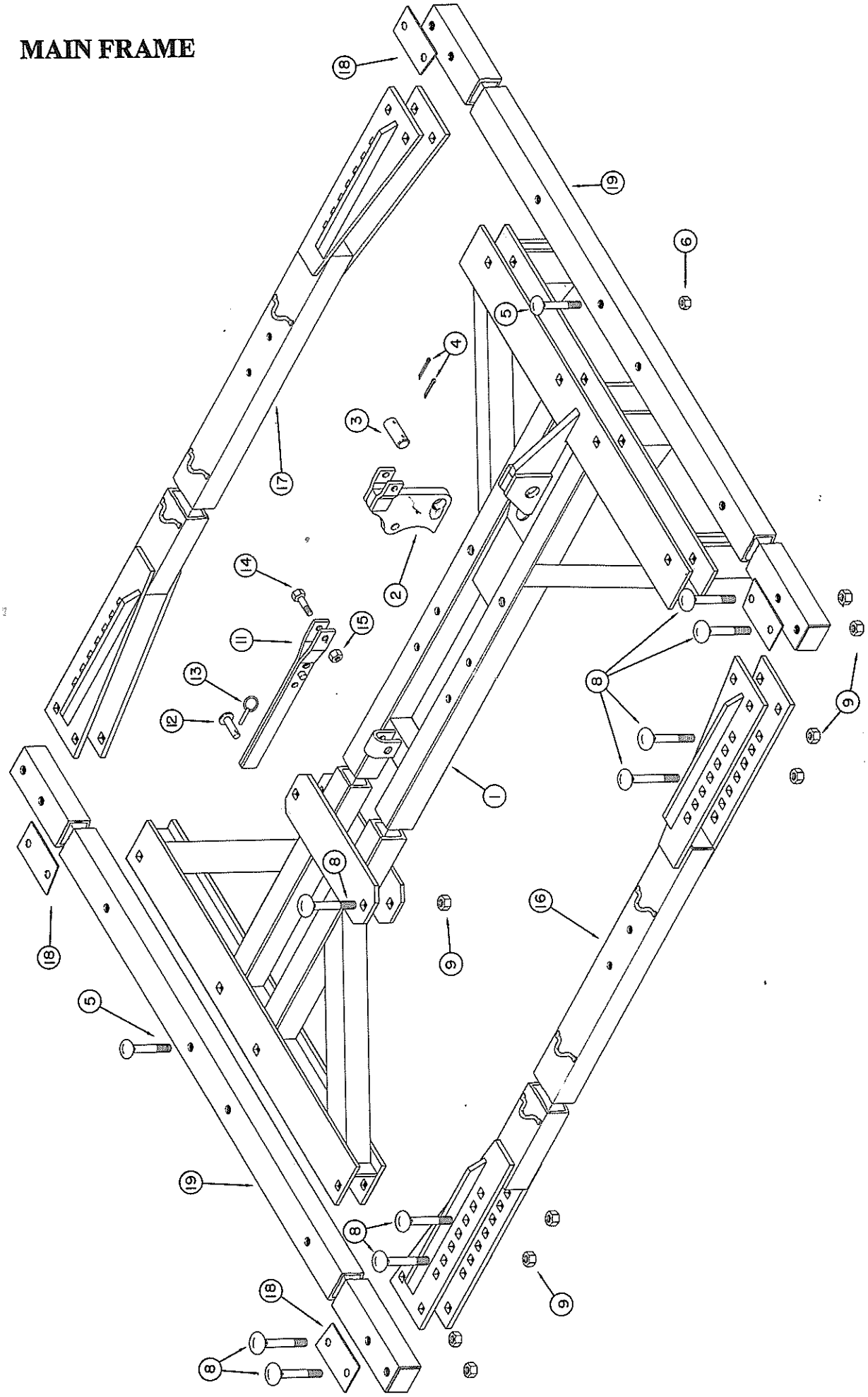

AMCO HWTF9, 10 & 11 SERIES DISK HARROW
MAIN FRAME

Ref. No.	Part No.	Description	No. Req'd
1	0745	**Frame** — Main	1
2	1460	**Hydraulic Cylinder Bracket**	1
3	6388	**Pivot Pin**	1
4	10087	**Cotter Pin** 1/4 x 2	2
5	10130	**Carriage Bolt** 5/8 x 5 NC, PL	8
6	10299	**Lock Nut** 5/8 NC, PL	8
8	10370	**Carriage Bolt** 7/8 x 5-1/2 NC, PL	18
9	10396	**Lock Nut** 7/8 NC, PL	18
11	1443	**Transport Bar**	1
12	0388	**Transport Pin**	1
13	10317	**Klik Pin** 1/4	1
14	10727	**Machine Bolt** 3/4 x 3 NC, PL, GR5	1
15	10300	**Lock Nut** 3/4 NC, PL	1
16	0742	**Bar** — Side RH — HWTF10 and 11	1
16	1483	**Bar** — Side RH — HWTF9	1
17	0741	**Bar** — Side LH — HWTF10 and 11	1
17	1484	**Bar** — Side LH — HWTF9	1
18	5429	**Shim**	4
19	1481	**Bar** — Front or Rear	2

ROCKSHAFT

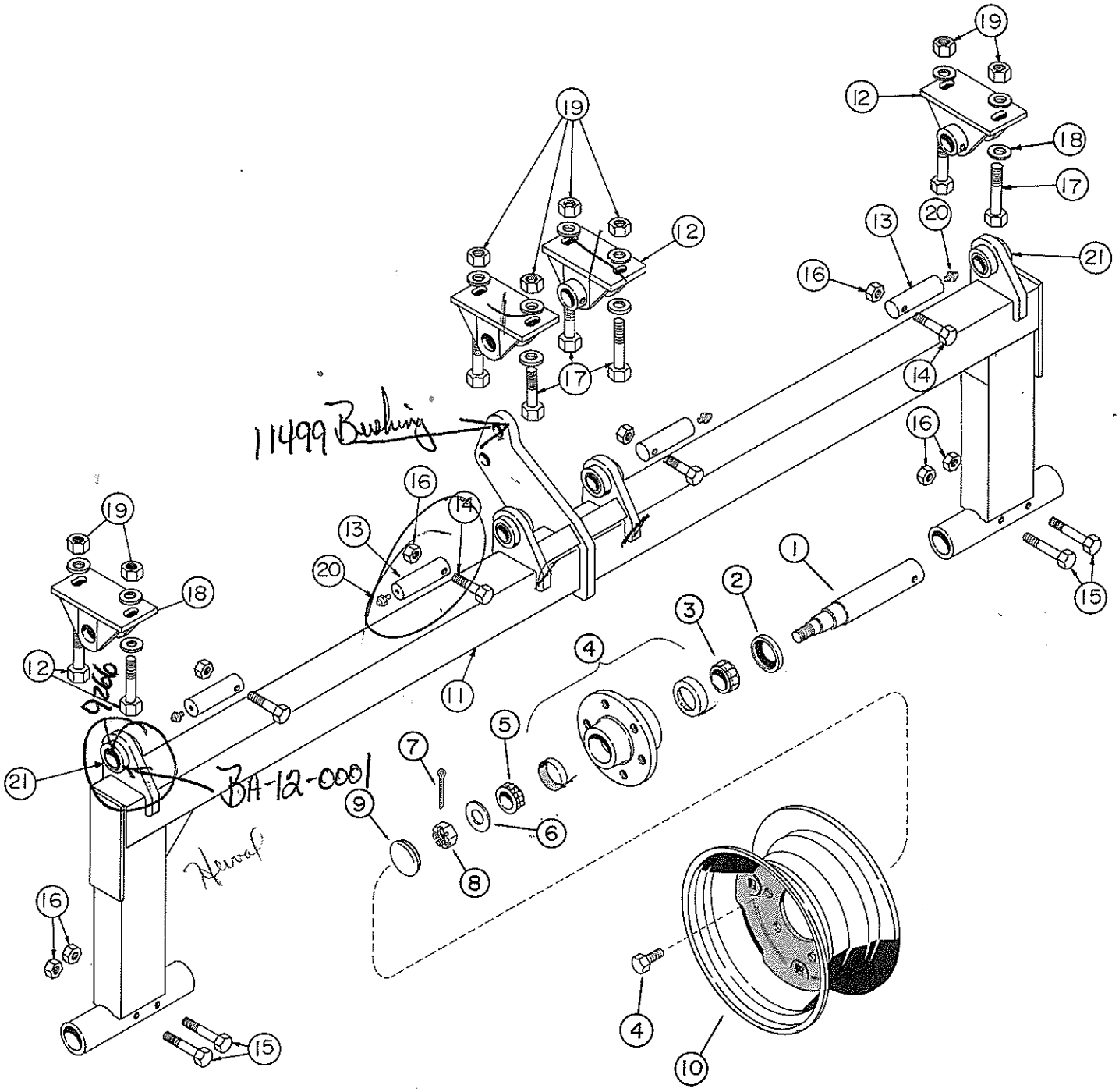

AMCO HWTF9, 10 & 11 SERIES DISK HARROW ROCKSHAFT

BC-05-0058 14137A

Ref. No.	Part No.	Description	No. Req'd
1	10880	**Spindle** 1-15/16 Dia	4
2	10256	**Seal**	4
3	10258	**Cone** — Inner Timken 342A	4
4	~~10254~~ 11297	**Hub** — W/2 Cups & 6 Hub Bolts	4
4	10257	**Cup** — Inner Timken 332	4
4	10261	**Cup** — Outer Timken 14276	4
4	10259	**Hub Bolt** 1/2 x 1 NF	24
5	10262	**Cone** — Outer Timken 14137A	4
6	10263	**Washer** 7/8	4
7	10291	**Cotter Pin** 5/32 x 1-1/4	4
8	10264	**Slotted Nut** 7/8 NF	4
9	10242	**Cap** — Hub	4
10	10936	**Wheel** 15 x 8 — 6 Hole	4
11	0557	**Rockshaft** W/4 Bushings	4
12	0754	**Base** — Rockshaft Bearing HWTF10 and 11	4
12	0553	**Base** — Rockshaft Bearing HWTF9	4
13	9209	**Pin** — Retainer 1-1/2 Dia	4
14	10765	**Machine Bolt** 3/8 x 2-1/2 NC, PL, GR5	4
15	10773	**Machine Bolt** 3/8 x 3-1/2 NC, PL, GR5	4
16	10509	**Lock Nut** 3/8 NC, PL	8
17	10671	**Hex Bolt** 3/4 x 5 NC, PL, GR5 HWTF10 & 11	8
17	10106	**Hex Bolt** 5/8 x 4-1/2 NC, PL, GR5 HWTF9	8
18	10866	**Cut Washer** 3/4 PL HWTF10 & 11	16
18	10059	**Cut Washer** 5/8 PL HWTF9	16
19	10300	**Lock Nut** 3/4 NC, PL HWTF10 & 11	10
19	10299	**Lock Nut** 5/8 NC, PL HWTF9	8
20	11081	**Grease Fitting** 5/16 Straight (Drive In)	4
21	9270	**Bushing Bronze** (Not Shown)	4

CENTER TOOTH ATTACHMENT

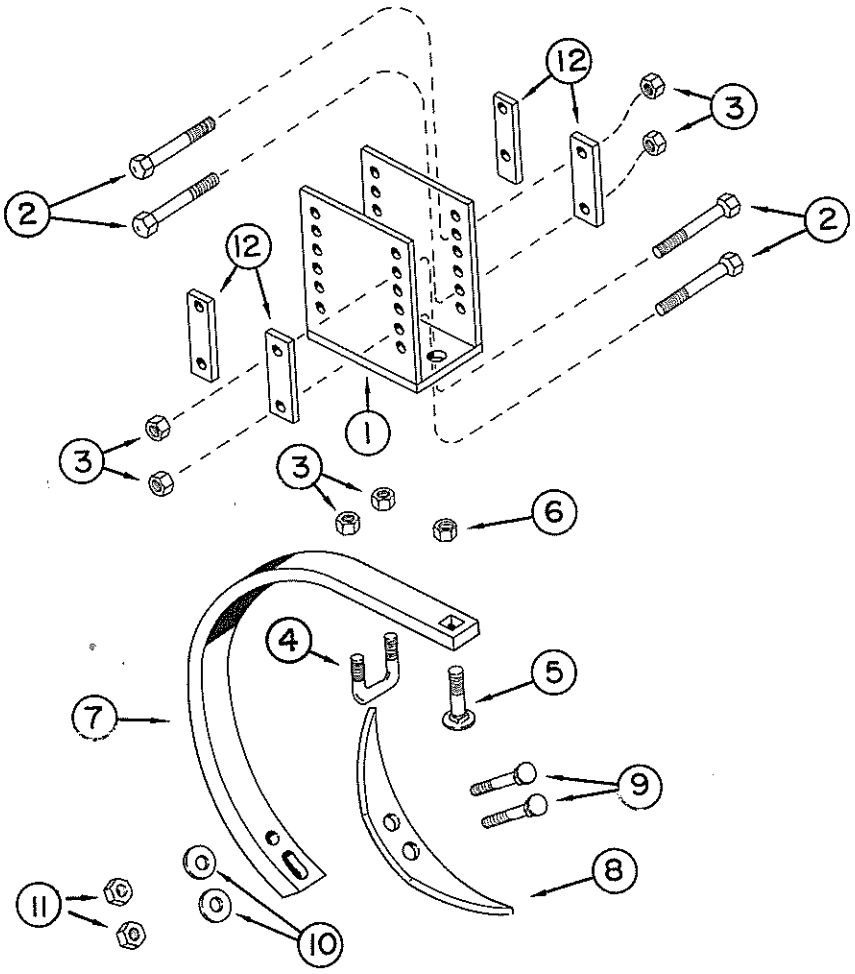

GANG REST

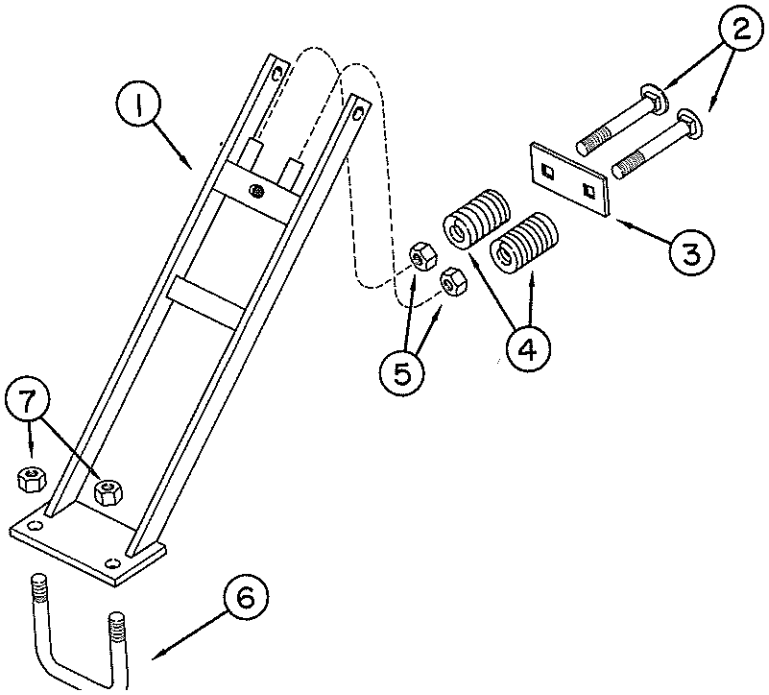

WING LOCK

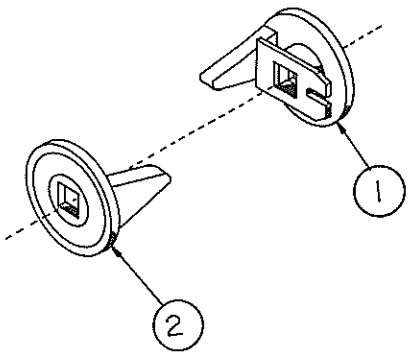

AMCO HWTF9, 10 & 11 SERIES DISK HARROW CENTER TOOTH ATTACHMENT

Ref. No.	Part No.	Description	No. Req'd
1	0729	**Buster** — Balk	1
2	10666	**Bolt** — Machine 5/8 x 5 NC, PL, GR5	8
3	10299	**Nut** — Lock 5/8 NC, PL	10
4	100087	**Bolt** — "U" 5/8 Dia	1
5	10389	**Bolt** — Carriage 3/4 x 2-1/2 NC, PL	1
6	10300	**Nut** — Lock 3/4 NC, PL	1
7	10378	**Tine**	1
8	10379	**Spike**	1
9	10420	**Bolt** — Plow 1/2 x 2-1/4 NC, PL	2
10	10832	**Washer** — 1/2 PL	2
11	10395	**Nut** — Lock 1/2 NC, PL	2
12	7928	**Strap** — Clamp 1/2 x 1-1/2 x 5-1/4 Long	4
	BB-01-0009	**Center Tooth Attachment** — Complete	

AMCO HWTF9 SERIES DISK HARROW GANG REST

[Before Serial No. 2532: Not Required After Serial No. 2532]

Ref. No.	Part No.	Description	No. Req'd
1	0561	**Rest** — Gang	4
2	10073	**Bolt** — Carriage 5/8 x 6 NC, PL	8
3	9635	**Pad** — Bumper	4
4	10691	**Spring**	8
5	10299	**Nut** — Lock 5/8 NC, PL	8
6	6513	**Bolt** — U	4
7	10300	**Nut** — Lock 3/4 NC, PL	8
	10671	**Bolt** — Machine 3/4 x 5 NC, PL, GR5 (Not Shown)	4

AMCO HWTF9, 10 & 11 SERIES DISK HARROW WING LOCKS

Ref. No.	Part No.	Description	No. Req'd
1	0796	**Wing Lock and End Washer**	4
2	0797	**Wing Lock and Bumper Washer**	4
	BB-01-0013	**Bundle Wing Locks Complete Set of 4**	

HWTF9 HYDRAULIC CIRCUIT

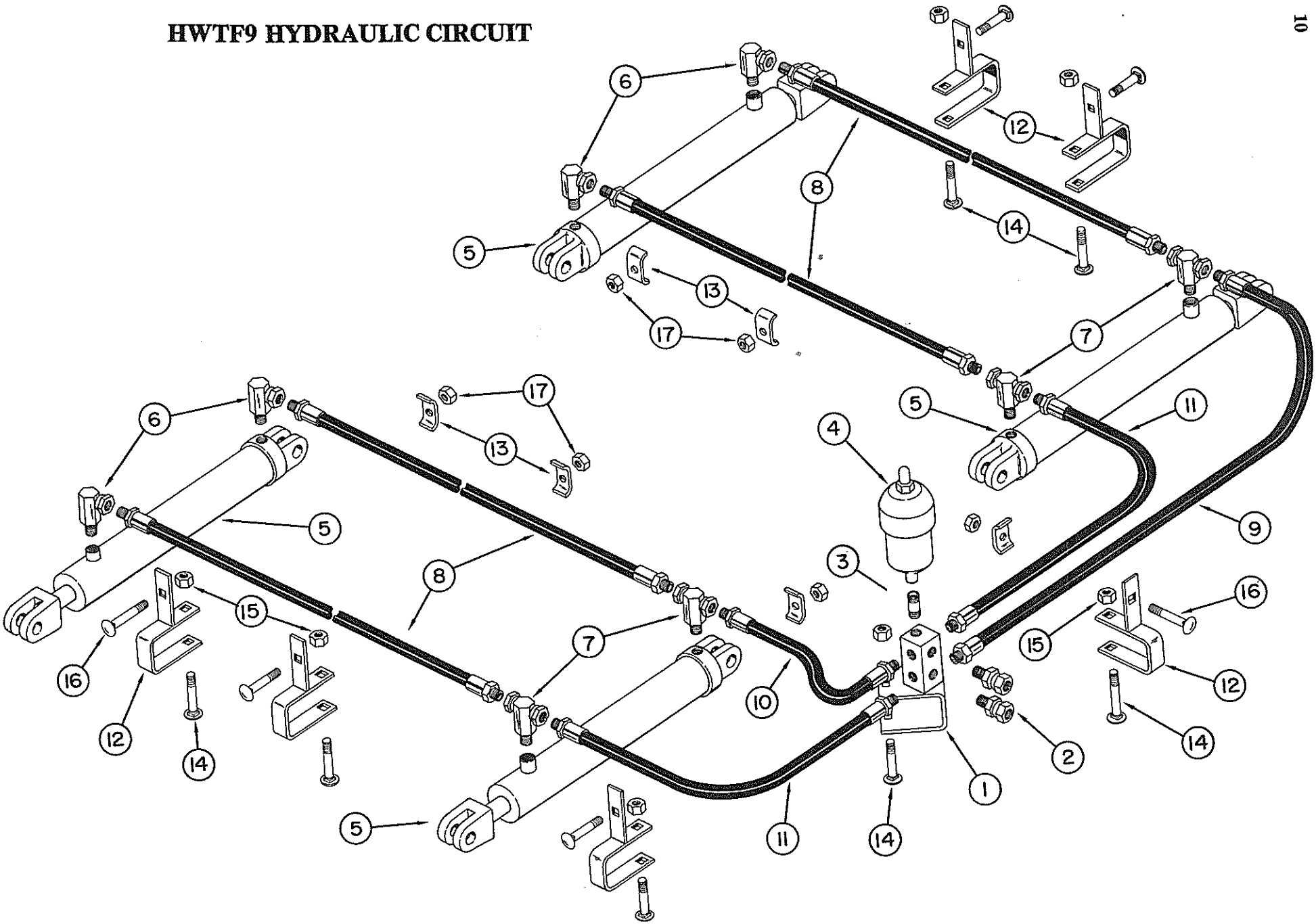

AMCO HWTF9 SERIES DISK HARROW
HYDRAULIC CIRCUIT

Ref. No.	Part No.	Description	No. Req'd
1	0567	**Manifold**	1
2	10932	**Restrictor**	2
3	11097	**Nipple** — Adapter	1
4	10920	**Accumulator**	1
5	10916	**Cylinder** — Hydraulic 3 x 16	4
6	10921	**Elbow** — 90° Swivel 1/2 NPT	4
7	10923	**Tee** — Male Branch 1/2 NPT	4
8	10925	**Hose** — 3/8 x 96"	4
9	10924	**Hose** — 3/8 x 70"	1
10	10917	**Hose** — 3/8 x 33"	1
11	10918	**Hose** — 3/8 x 52"	2
12	0568	**Support** — Hose	6
13	7369	**Clamp** — Hose	6
14	10647	**Bolt** — Carriage 1/2 x 4 NC, PL	7
15	10395	**Nut** — Lock 1/2 NC, PL	7
16	10499	**Bolt** — Carriage 3/8 x 1-3/4 NC, PL	6
17	10509	**Nut** — Bolt 3/8 NC, PL	6
	10940	**Tape** — Teflon (Not Shown)	1

HWTF10 & 11
HYDRAULIC CIRCUIT

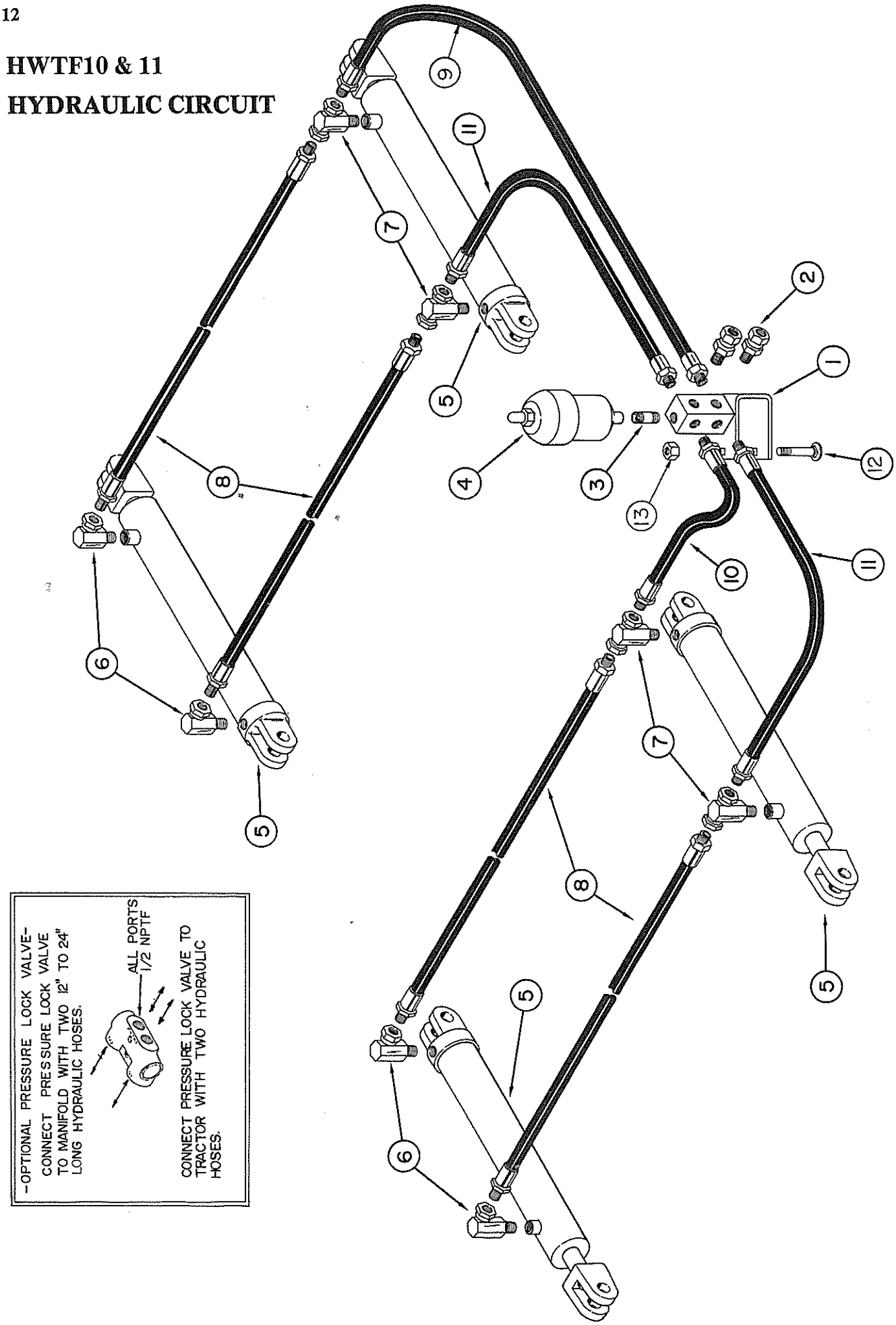

AMCO HWTF10 & 11 SERIES DISK HARROW HYDRAULIC CIRCUIT

Ref. No.	Part No.	Description	No. Req'd
1	0764	**Assy Manifold**	1
2	10932	**Restrictor**	2
3	11097	**Nipple** — Adapter	1
4	10920	**Accumulator**	1
5	10916	**Cylinder** 3 x 16	4
6	11127	**Elbow** — 90° Swivel 1/2 NPTF to 1/4 NPTF	4
7	11126	**Tee** — Male Branch 1/2 NPTF to 1/4 NPTF	4
8	11123	**Hose** 1/4 x 96	4
9	11121	**Hose** 1/4 x 72	1
10	11119	**Hose** 1/4 x 36	1
11	11120	**Hose** 1/4 x 54	2
12	10647	**Carriage Bolt** 1/2 x 4 — NC, PL	1
13	10395	**Lock Nut** 1/2 NC, PL	1
	10940	**Tape** — Teflon (Not Shown)	1

AMCO HWTF9, 10 & 11 DISK HARROW PRESSURE LOCK VALVE [OPTIONAL]

Ref. No.	Part No.	Description	No. Req'd
1	11109	**Pressure Lock Valve**	1

3 x 16 HYDRAULIC CYLINDER

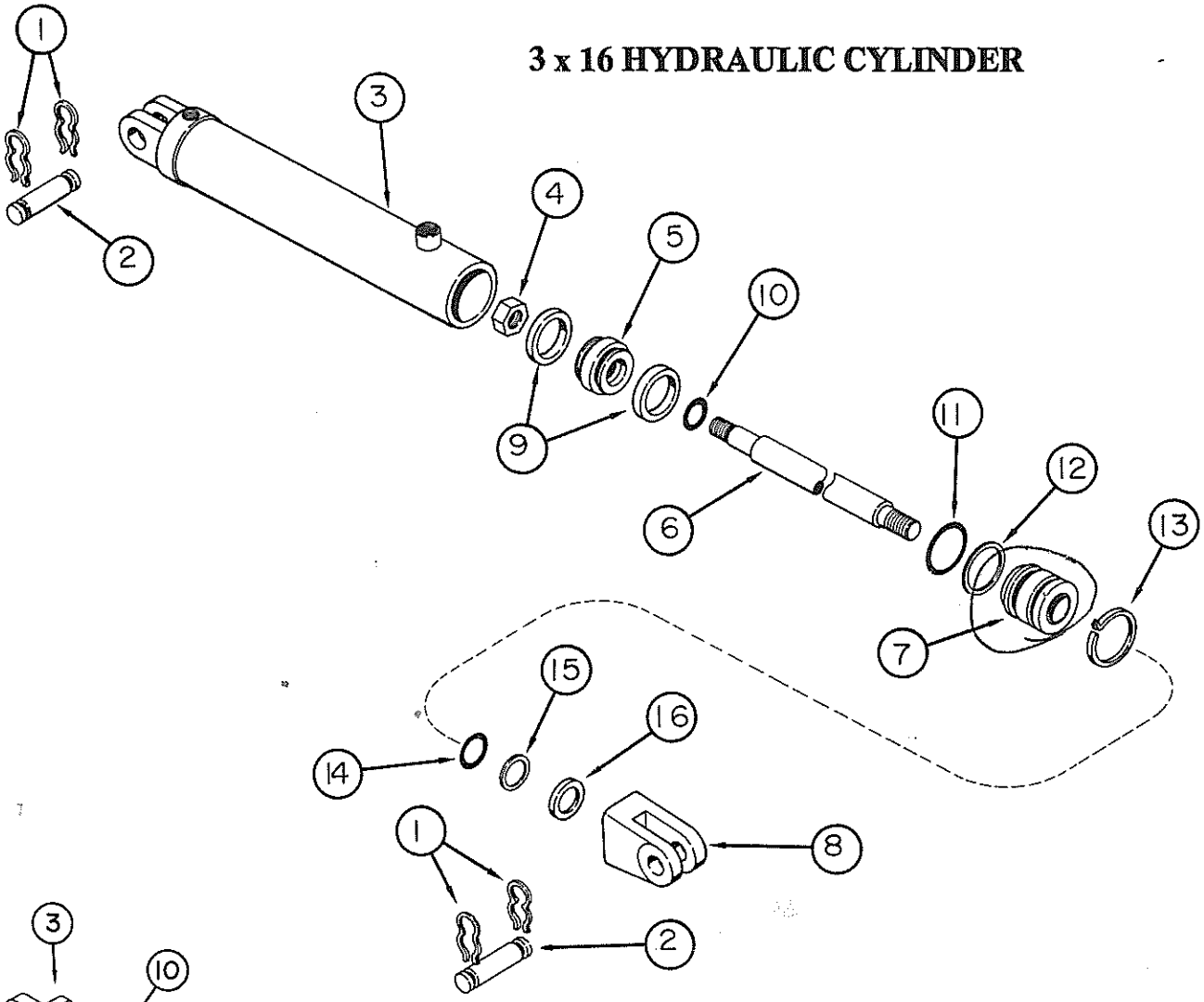

4 x 8 HYDRAULIC CYLINDER [OPTIONAL]

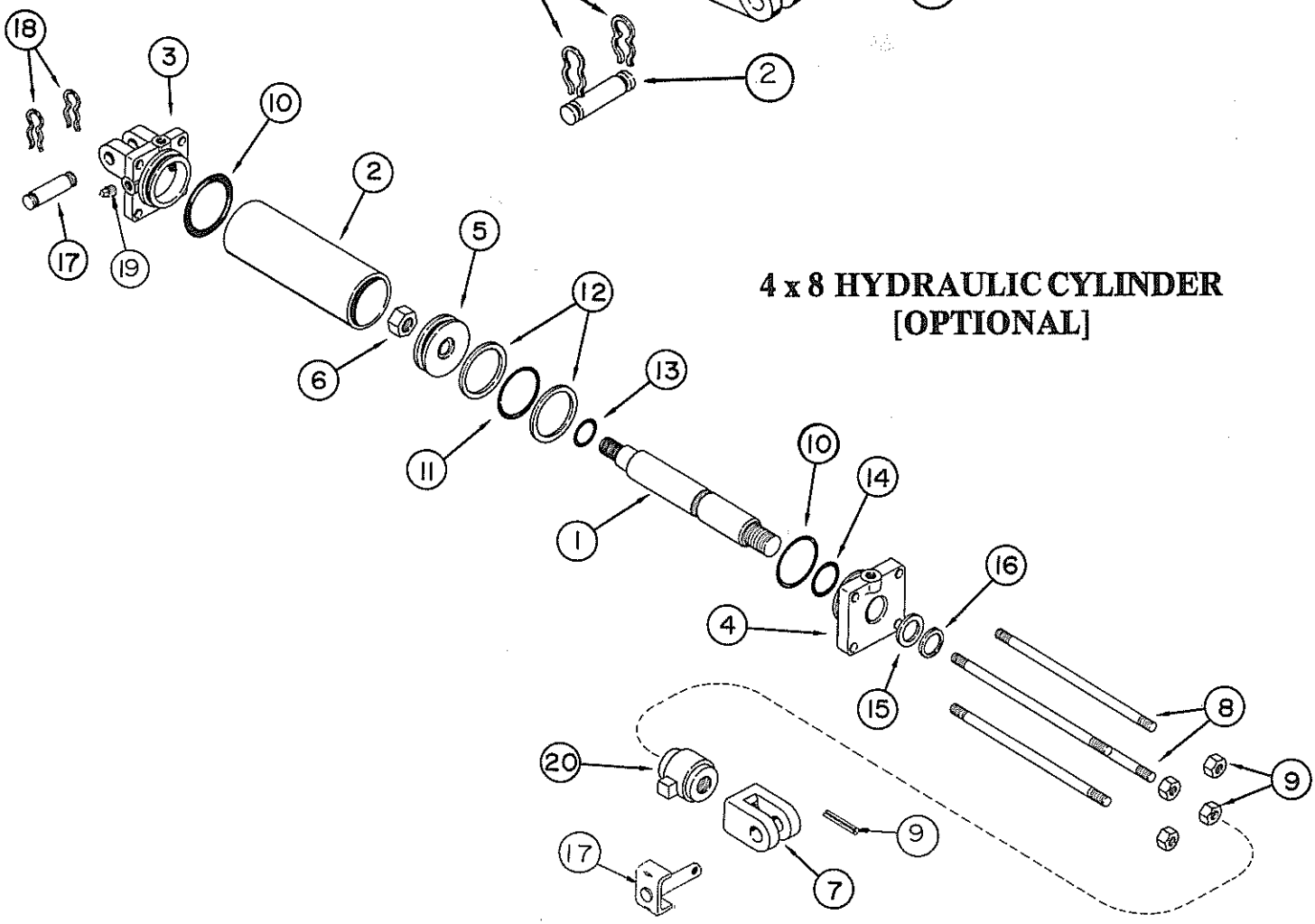

AMCO HWTF9, 10 & 11 SERIES DISK HARROW
3 X 16 HYDRAULIC CYLINDER [PRINCE #P-1046]

Ref. No.	Part No.	Description	No. Req'd
	10916	**Cylinder Complete** (Prince #P-1046)	4
1	10957	**Clip** — Hair Pin	2
2	11096	**Pin** — Clevis 1 Dia. x 3-1/2 Long	1
3	10983	**Butt & Tube**	1
4	10986	**Nut** — Lock 3/4 - 16 NF	1
5	10985	**Piston**	1
6	10982	**Rod** — Piston	1
7	10984	**Gland**	1
8	10987	**Clevis**	1
	10996	**Kit** — Seal Repair (Prince #PMCK-P-1046)	1
9	10988	**Cup** — "U"	2
10	10989	**Ring** — "O"	1
11	10990	**Ring** — "O"	1
12	10991	**Washer** — Back Up	1
13	10995	**Ring** — Retainer	1
14	10992	**Ring** — "O"	1
15	10993	**Washer** — Back Up	1
16	10994	**Wiper**	1

Note: Item 9-16 Sold in Seal Repair Kit Only

AMCO HWTF9, 10 & 11 SERIES DISK HARROW
4 X 8 HYDRAULIC CYLINDER [PRINCE #8608] [OPTIONAL]

Ref. No.	Part No.	Description	No. Req'd
	10934	**Cylinder Complete** (Prince #8608)	
1	10965	**Rod** — Piston Assembly	1
2	10966	**Tube**	1
3	10952	**Butt**	1
4	10967	**Head Piston**	1
5	10968	**Piston**	1
6	10980	**Lock Nut** 1-14 NF	1
7	10969	**Clevis Assembly** 1" Dia Pin	1
8	10970	**Rod Tie**	4
9A	10139	**Nut** 5/8 — NC, PL	4
9B	10910	**Roll Pin**— 5/16 x 2-1/4	1
	10976	**Kit Seal Repair** (Prince #8600)	1
10	10958	**"O" Ring**	2
11	10959	**"O" Ring**	1
12	10960	**Washer** — Back Up	2
13	10971	**"O" Ring**	1
14	10972	**"O" Ring**	1
15	10973	**Washer** — Back Up	1
16	10974	**Wiper**	1
17	0793	**Hitch Pin** 1" Dia	1
18	10957	**Clip Hair Pin**	2
19	10978	**Plug** — Pipe 1/2 NPT	1
20	10937	**Stroke Control**	1

Note: Item 10-16 Sold in Seal Repair Kit Only

FRONT INSIDE GANG — HWTF9

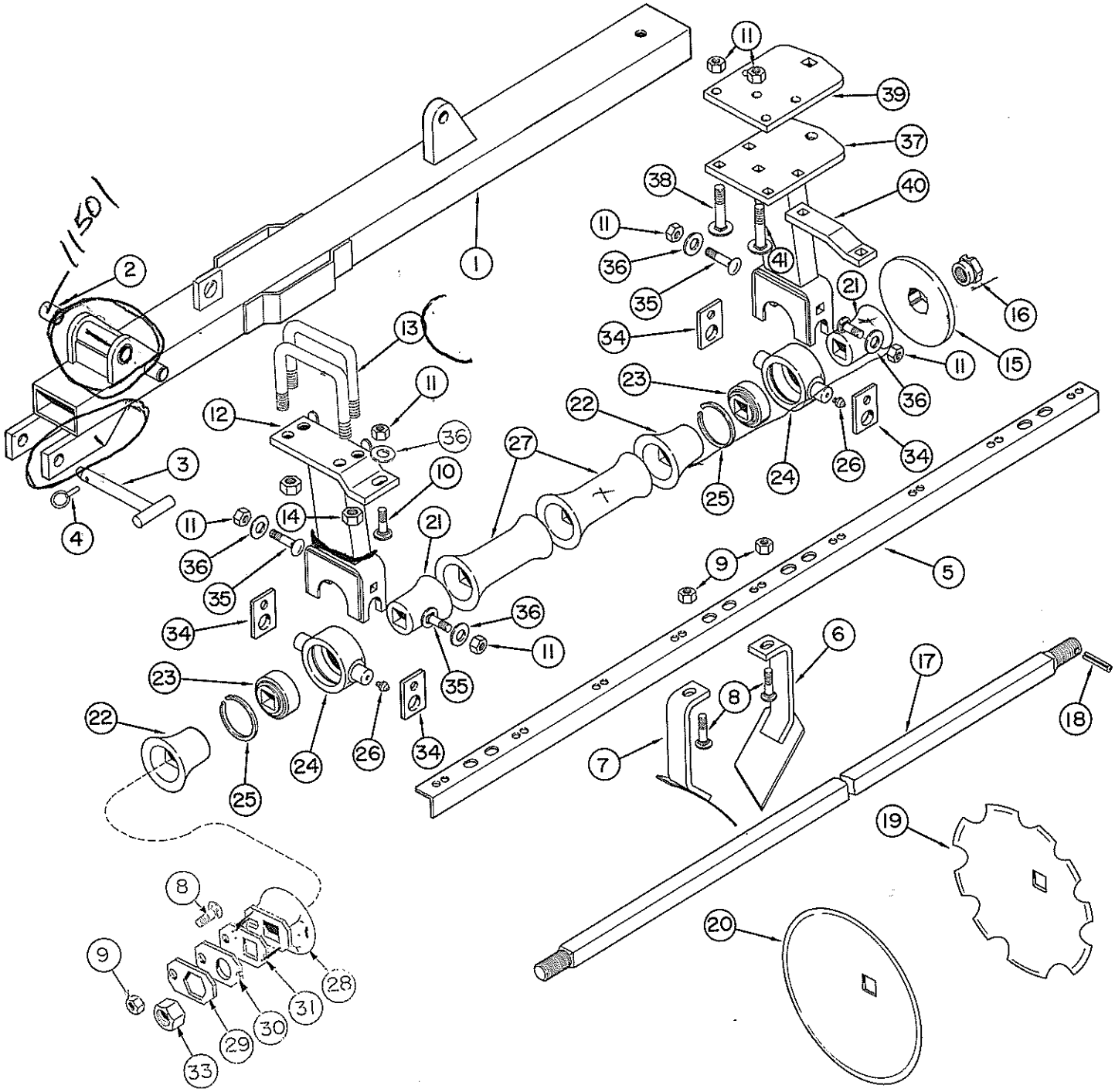

HWTF-10 FLANGETTE
BB-01-0020 THIRD BEARING CONVERSION KIT.
FOR FRONT GANG ONLY- ORDER 2 KITS FOR FRONT+REAR.

AMCO HWTF9 SERIES DISK HARROW

FRONT INSIDE GANG

Ref. No.	Part No.	Description	No. Req'd
1	0562	**Frame** — Gang Front	1
2	9637	**Bushing** — Faflon	2
3	0618	**Pin** — Pivot	1
4	10317	**Pin** — Klik	1
5	9551	**Bar** — Scraper 79 1/4	1
6	0533	**Scraper** — FRH, RLH	9
7	0534	**Scraper** — FLH, RRH	9
8	10870	**Bolt** — Carriage 1/2 x 1-1/2 NC, PL, GR5	10
9	10395	**Nut** — Lock 1/2 NC PL	10
10	10135	**Bolt** — 5/8 x 1-3/4 NC, PL	3
11	10299	**Nut** — Lock 5/8 NC, PL	14
12	0559 ~~0599~~	**Riser** — Bearing FRH, RLH	2
12	0560	**Riser** — Bearing FLH, RRH	2
13	6513	**Bolt** — "U"	4
14	10300	**Nut** — Lock 3/4 NC, PL	8
15	9578	**Washer** — Bumper	1
16	9577	**Nut** — Gang Bolt Special	1
17	9445	**Bolt** — Gang 9 Blade 79-7/8	1
18	10910	**Pin** — Roll 5/16 x 2-1/4	1
19	2455	**Blade** — 24 Dia x 3/16 CO	9
19	3275	**Blade** — 22 Dia x 1/4 CO	9
19	9484	**Blade** — 22 Dia x 3/16 CO	9
20	3253	**Blade** — 24 Dia x 3/16 Plain	9
20	3276	**Blade** — 22 Dia x 1/4 Plain	9
20	9480	**Blade** — 22 Dia x 3/16 Plain	9
21	9350	**Bell** — End Small	3
22	9351	**Bell** — End Large	3
	FB-09-0001	**Bearing and Housing** (Fully Assemblied)	3
23	G11071	**Bearing** — (Fafnir GW211PP3)	1
24	G2668	**Housing**	1
25	11064	**Ring** — Snap	1
26	10606	**Fitting** — Grease 1/8 NPT Straight	1
27	9272	**Spool** — Spacer	5
28	1222A	**Washer** — End Gang	1
29	5622A	**Plate** — Lock	1
30	100098	**Bearing Plate**	1
31	100099	**Spacer Plate**	As Required
33	10489	**Nut** — Gang Bolt 1-1/2 NF	1
34	9628	**Clamp** — Trunion	6
35	10665	**Bolt** — Carriage 5/8 x 2 NC, PL, GR5	6
36	10059	**Washer** — 5/8 PL	9
37	0558	**Riser** — Bearing Inside Front	1
38	10130	**Bolt** — Carriage 5/8 x 5 NC, PL	4
39	5638	**Plate** — Pivot Upper	1
40	9474	**Mount** — Scraper Bar — Special	1
41	10073	**Bolt** — Carriage 5/8 x 6 NC, PL	1
	8970	**Spacer** — 3/8 Thick x 6 Dia. (Not Shown)	As Required
	10396	**Nut** — Lock 7/8 NC, PL (Not Shown)	1
	10370	**Bolt** — Carriage 7/8 x 5-1/2 — NC, PL (Not Shown)	1

REAR INSIDE GANG — HWTF9

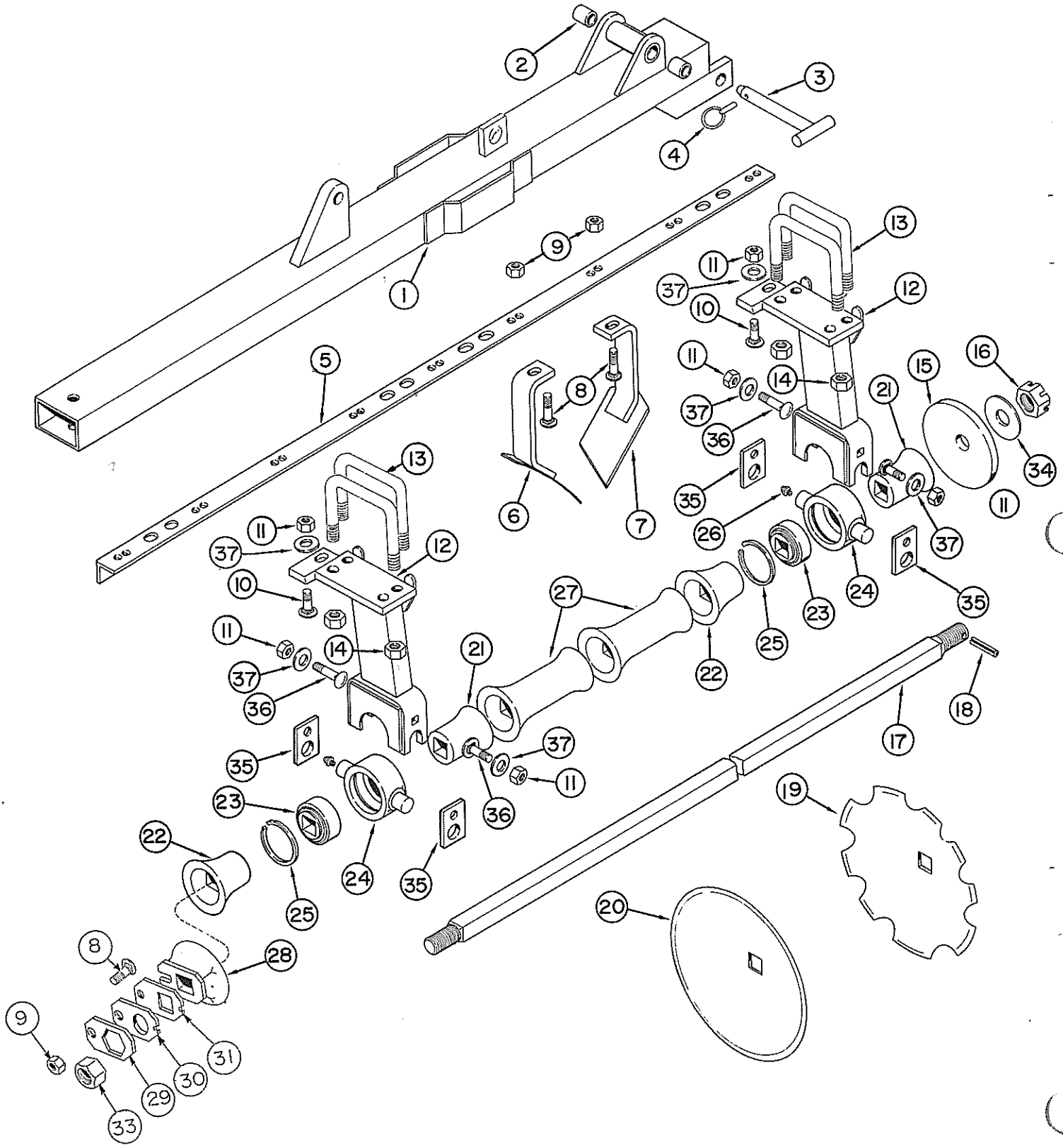

AMCO HWTF9 SERIES DISK HARROW
REAR INSIDE GANG

Ref. No.	Part No.	Description	No. Req'd
1	0563	**Frame** — Gang Rear	1
2	9637	**Bushing** — Faflon	2
3	0618	**Pin** — Pivot	1
4	10317	**Pin** — Klik	1
5	9551	**Bar** — Scraper 79-1/4	1
6	0533	**Scraper** — FRH, RLH	9
7	0534	**Scraper** — FLH, RRH	9
8	10870	**Bolt** — Carriage 1/2 x 1-1/2 NC, PL, GR5	10
9	10395	**Nut** — Lock 1/2 NC, PL	10
10	10135	**Bolt** — 5/8 x 1-3/4 NC, PL	3
11	10299	**Nut** — Lock 5/8 NC, PL	9
12	0559	**Riser** — Bearing FRH, RLH	3
12	0560	**Riser** — Bearing FLH, RRH	3
13	6513	**Bolt** — "U"	6
14	10300	**Nut** — Lock 3/4 NC, PL	12
15	2404	**Washer** — Bumper	1
16	10226	**Nut** — Gang Bolt 1-1/2 NF Slotted	1
17	9445	**Bolt** — Gang 9 Blade 79-7/8	1
18	10910	**Pin** — Roll 5/16 x 2-1/4	1
19	2455	**Blade** — 24 Dia x 3/16 CO	9
19	3275	**Blade** — 22 Dia x 1/4 CO	9
19	9484	**Blade** — 22 Dia x 3/16 CO	9
20	3253	**Blade** — 24 Dia x 3/16 Plain	9
20	3276	**Blade** — 22 Dia x 1/4 Plain	9
20	9480	**Blade** — 22 Dia x 3/16 Plain	9
21	9350	**Bell** — End Small	3
22	9351	**Bell** — End Large	3
	FB-09-0001	**Bearing and Housing** (Fully Assemblied)	3
23	G11071	**Bearing** — (Fafnir GW211PP3)	1
24	G2668	**Housing**	1
25	11064	**Ring** — Snap	1
26	10606	**Fitting** — Grease 1/8 NPT Straight	1
27	9272	**Spool** — Spacer	5
28	1222A	**Washer** — End Gang	1
29	5622A	**Plate** — Lock	1
30	100098	**Bearing Plate**	1
31	100099	**Spacer Plate**	As Required
33	10489	**Nut** — Gang Bolt 1-1/2 NF	1
34	10872	**Washer** — 1-3/8 PL	1
35	9628	**Clamp** — Trunion	6
36	10665	**Bolt** — Carriage 5/8 x 2 NC, PL GR5	6
37	10059	**Washer** — 5/8 PL	9
	8970	**Spacer** — 3/8 Thick x 6 Dia (Not Shown)	As Required

FRONT WING GANG — HWTF9

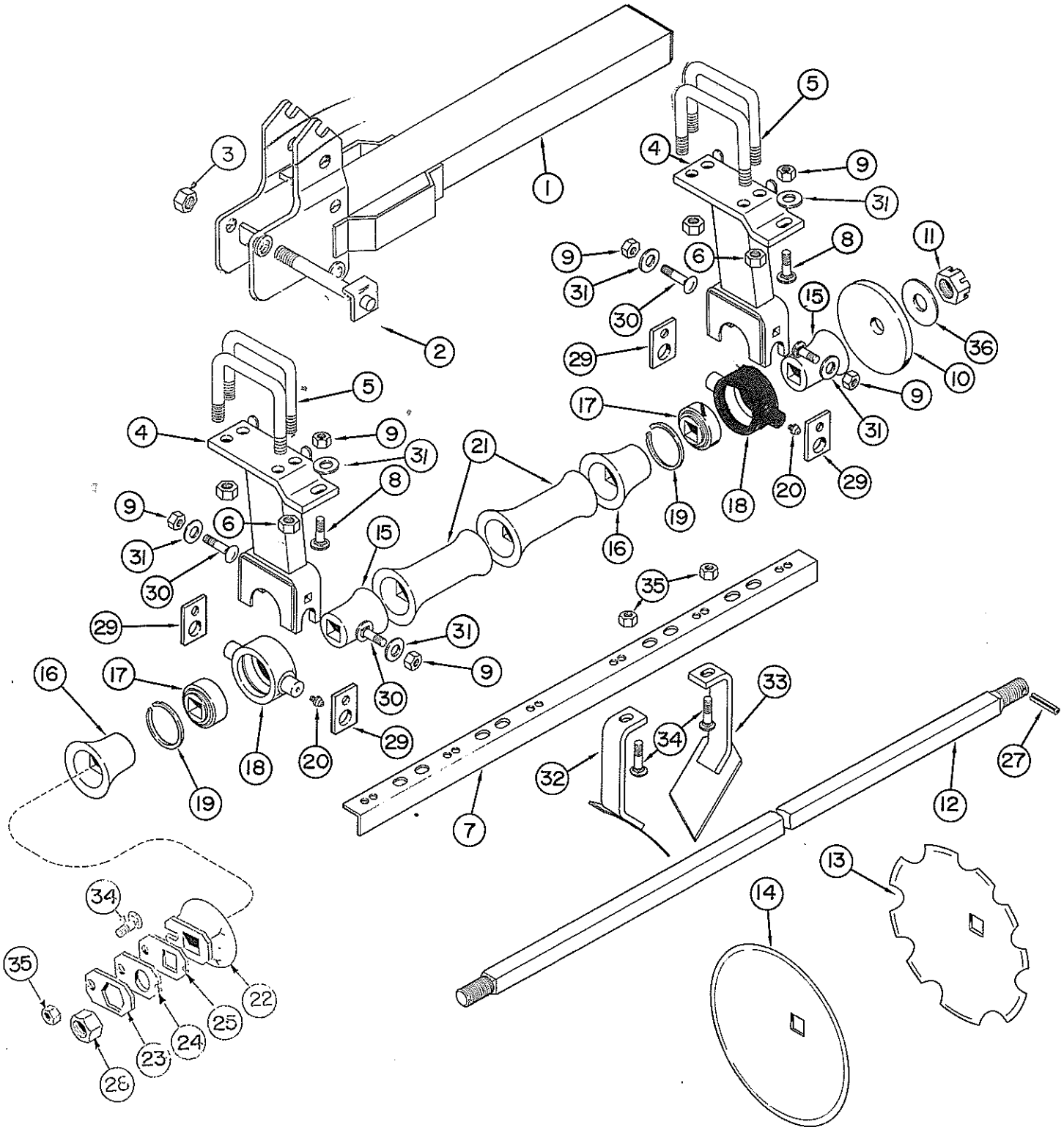

AMCO HWTF9 SERIES DISK HARROW
FRONT WING GANG

Ref. No.	Part No.	Description	No. Required 54 Blade	58 Blade	62 Blade
1	0565A	**Frame** — Wing Gang 4 Blade	1	—	—
1	0564A	**Frame** — Wing Gang 5 Blade	—	1	—
1	0566A	**Frame** — Wing Gang 6 Blade	—	—	1
2	0727	**Pin** — Pivot	1	1	1
3	10397	**Nut** — Lock 1-1/4 NC, PL	1	1	1
4	0560	**Riser** — Bearing FLH, RRH	2	2	2
4	0559	**Riser** — Bearing FRH, RLH	2	2	2
5	6513	**Bolt** — "U"	4	4	4
6	10300	**Nut** — Lock 3/4 NC, PL	8	8	8
7	9476	**Bar** — Scraper 33-5/16	1	—	—
7	9475	**Bar** — Scraper 42-1/2	—	1	—
7	9548	**Bar** — Scraper 51-11/16	—	—	1
8	10135	**Bolt** — Carriage 5/8 x 1-3/4 NC, PL	2	2	2
9	10299	**Nut** — Lock 5/8 NC, PL	6	6	6
10	2404	**Washer** — Bumper	1	1	1
11	10226	**Nut** — Gang Bolt 1-1/2 NF Slotted	1	1	1
12	9440	**Bolt** — Gang 4 Blade 33-5/8	1	—	—
12	9441	**Bolt** — Gang 5 Blade 42-7/8	—	1	—
12	9442	**Bolt** — Gang 6 Blade 52-1/8	—	—	1
13	2455	**Blade** — 24 x 3/16 CO	3	4	5
13	3275	**Blade** — 22 x 1/4 CO	3	4	5
13	9484	**Blade** — 22 x 3/16 CO	3	4	5
13	9487	**Blade** — 20 x 3/16 CO	1	1	1
14	3253	**Blade** — 24 x 3/16 Plain	3	4	5
14	3276	**Blade** — 22 x 1/4 Plain	3	4	5
14	9480	**Blade** — 22 x 3/16 Plain	3	4	5
14	9481	**Blade** — 20 x 3/16 Plain	1	1	1
15	9350	**Bell** — End Small	2	2	2
16	9351	**Bell** — End Large	2	2	2
	FB-09-0001	**Bearing and Housing** (Fully Assembled)	2	2	2
17	G11071	**Bearing** — (Fafnir GW211PP3)	1	1	1
18	G2668	**Housing** — Bearing	1	1	1
19	11064	**Ring** — Snap	1	1	1
20	10606	**Grease Fitting** 1/8 NPT Straight	1	1	1
21	9272	**Spool** — Spacer	1	2	3
22	1222A	**Washer** — End Gang	1	1	1
23	5622A	**Plate** — Lock	1	1	1
24	100098	**Bearing Plate**	1	1	1
25	100099	**Spacer Plate**		As Required	
27	10910	**Pin** — Roll 5/16 x 2-1/4	1	1	1
28	10489	**Nut** — Gang Bolt 1-1/2 NF	1	1	1
29	9628	**Clamp** — Trunion	4	4	4
30	10665	**Bolt** — Carriage 5/8 x 2 NC, PL, GR5	4	4	4
31	10059	**Washer** — 5/8 PL	6	6	6
32	0533	**Scraper** — FRH, RLH	4	5	6
33	0534	**Scraper** — FLH, RRH	4	5	6
34	10870	**Bolt** — Carriage 1/2 x 1-1/2 NC, PL, GR5	5	6	7
35	10395	**Nut** — Lock 1/2 NC, PL	5	6	7
36	10872	**Washer** 1-3/8 PL	1	1	1
	8970	**Spacer** — 3/8 Thick x 6 Dia (Not Shown)		As Required	

REAR WING GANG — HWTF9

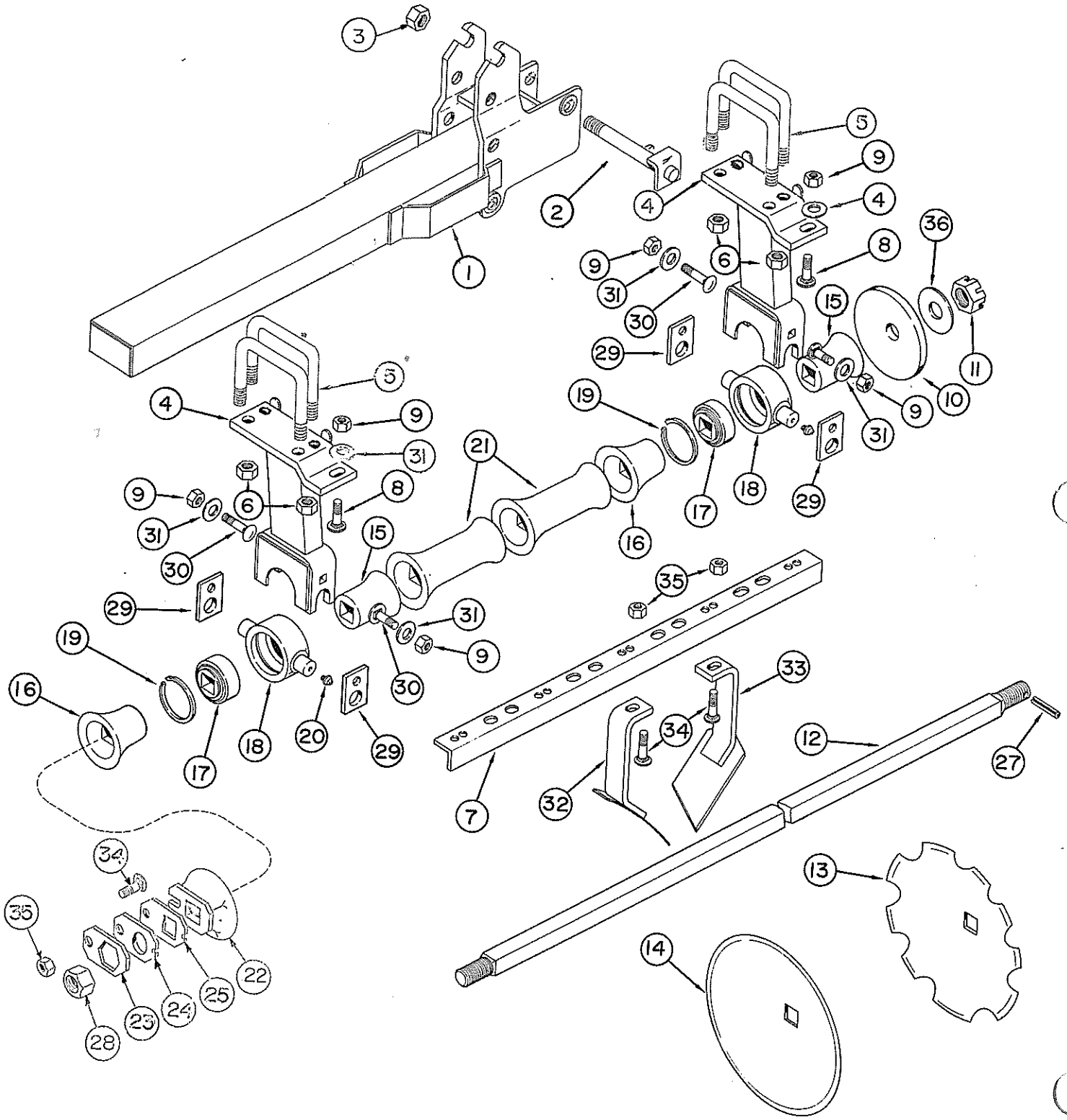

AMCO HWTF9 SERIES DISK HARROW
REAR WING GANG

Ref. No.	Part No.	Description	No. Required 54 Blade	58 Blade	62 Blade
1	0565A	**Frame** — Wing Gang 4 Blade	1	—	—
1	~~0564A~~	~~**Frame** — Wing Gang 5 Blade~~	—	1	—
1	0566A	**Frame** — Wing Gang 6 Blade	—	—	1
2	0727	**Pin** — Pivot	1	1	1
3	10397	**Nut** — Lock 1-1/4 NC, PL	1	1	1
4	0560	**Riser** — Bearing FLH, RRH	2	2	2
4	0559	**Riser** — Bearing FRH, RLH	2	2	2
5	6513	**Bolt** — "U"	4	4	4
6	10300	**Nut** — Lock 3/4 NC, PL	8	8	8
7	9475	**Bar** — Scraper 42-1/2	1	—	—
7	9548	**Bar** — Scraper 51-11/16	—	1	—
7	9549	**Bar** — Scraper 60-7/8	—	—	1
8	10135	**Bolt** — Carriage 5/8 x 1-3/4 NC, PL	2	2	2
9	10299	**Nut** — Lock 5/8 NC, PL	6	6	6
10	2404	**Washer** — Bumper	1	1	1
11	10266	**Nut** — Gang Bolt 1-1/2 NF Slotted	1	1	1
12	9441	**Bolt** — Gang 5 Blade 42-7/8	1	—	—
12	9442	**Bolt** — Gang 6 Blade 52-1/8	—	1	—
12	9443	**Bolt** — Gang 7 Blade 61-3/8	—	—	1
13	2455	**Blade** — 24 x 3/16 CO	3	4	5
13	3275	**Blade** — 22 x 1/4 CO	3	4	5
13	9484	**Blade** — 22 x 3/16 CO	3	4	5
13	9487	**Blade** —20 x 3/16 CO	1	1	1
14	3253	**Blade** — 24 x 3/16 Plain	3	4	5
14	3276	**Blade** — 22 x 1/4 Plain	3	4	5
14	9480	**Blade** — 22 x 3/16 Plain	3	4	5
14	9481	**Blade** — 20 x 3/16 Plain	1	1	1
14	3055	**Blade** — 16" 11 GA. Plain	1	1	1
15	9350	**Bell** — End Small	2	2	2
16	9351	**Bell** — End Large	2	2	2
	FB-09-0001	**Bearing and Housing** (Fully Assembled)	2	2	2
17	G11071	**Bearing** — (Fafnir GW211PP3)	1	1	1
18	G2668	**Housing** — Bearing	1	1	1
19	11064	**Ring** — Snap	1	1	1
20	10606	**Fitting** — Grease 1/8 NPT Straight	1	1	1
21	9272	**Spool** — Spacer	2	3	4
22	1222A	**Washer** — End Gang	1	1	1
23	5622A	**Plate** — Lock	1	1	1
24	100098	**Bearing Plate**	1	1	1
25	100099	**Spacer Plate**		As Required	
27	10910	**Pin** — Roll 5/16 x 2-1/4	1	1	1
28	10489	**Nut** — Gang Bolt 1-1/2 NF	1	1	1
29	9628	**Clamp** — Trunion	4	4	4
30	10665	**Bolt** — Carriage 5/8 x 2 NC, PL, GR5	4	4	4
31	10059	**Washer** — 5/8 PL	6	6	6
32	0533	**Scraper** — FRH, RLH	5	6	7
33	0534	**Scraper** — FLH, RRH	5	6	7
34	10870	**Bolt** — Carriage 1/2 x 1-1/2 NC, PL, GR5	6	7	8
35	10395	**Nut** — Lock 1/2 NC, PL	6	7	8
36	10872	**Washer** — 1-3/8 PL	1	1	1
	8970	**Spacer** — 3/8 Thick x 6 Dia. (Not Shown)		As Required	

FRONT INSIDE GANG — HWTF10

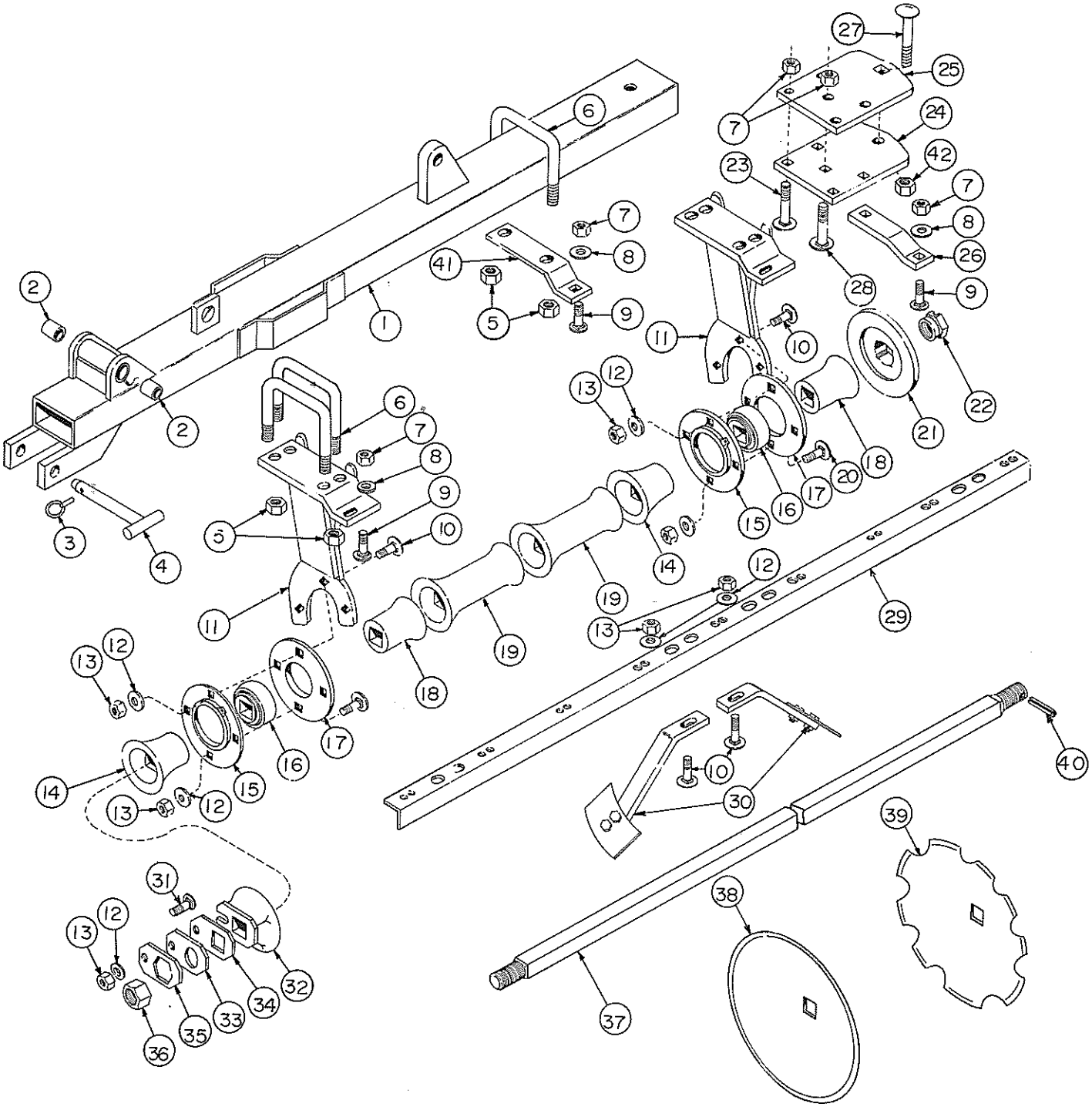

AMCO HWTF10 SERIES DISK HARROW
FRONT INSIDE GANG

Ref. No.	Part No.	Description	No. Req'd
1	0562	**Assy Gang Frame**	1
2	9637	**Bushing** (Faflon) 1-1/2 x 1-1/4 ID 1-1/2 LG	2
3	10317	**Klik Pin**	1
4	0618	**Assy Pivot Pin**	1
5	10300	**Lock Nut** 3/4 NC, PL	10
6	6513	**"U" Bolt** 3/4 Dia	5
7	10299	**Lock Nut** 5/8 NC, PL	9
8	10059	**Cut Washer** 5/8 PL	4
9	10135	**Carriage Bolt** 5/8 x 1-3/4 NC, PL	4
10	10870	**Carriage Bolt** 1/2 x 1-1/2 NC, PL, GR5	17
11	0758	**Assy. Bearing Riser** FRH, RLH	2
11	0759	**Assy. Bearing Riser** FLH, RRH	2
12	10832	**Cut Washer** 1/2 PL	21
13	10395	**Lock Nut** 1/2 NC, PL	21
14	9351	**End Bell** — Large	2
15	10904	**Flangette** G100 MSA2	2
16	10906	**Bearing** GW 211PPB3	2
17	10905	**Flangette** G100 MSB2	2
18	9350	**End Bell** — Small	2
19	9272	**Spacer Spool**	6
20	10860	**Carriage Bolt** 1/2 x 1 NC, PL	2
21	9578A	**Bumper Washer**	1
22	9577A	**Nut Gang Bolt**	1
23	10130	**Carriage Bolt** 5/8 x 5 NC, PL	4
24	5636	**Pivot Plate** Lower 5/8 x 7-1/8 x 10	1
25	5638	**Pivot Plate** Upper 5/8 x 7-1/8 x 10	1
26	9474	**Scraper Bar Support**	1
27	10370	**Carriage Bolt** 7/8 x 5-1/2 NC, PL	1
28	10073	**Carriage Bolt** 5/8 x 6 NC, PL	1
29	9923	**Scraper Bar** — RH — 72-1/8 Long	1
29	9924	**Scraper Bar** — LH — 72-1/8 Long	1
30	0788	**Scraper** — RH	8
	100270	**Scraper Blade** 3/16 x 4 x 6	1
	100271	**Scraper Leg** 1/2 x 1-1/2	1
	10785	**Hex Bolt** 1/2 x 1-1/2 NC, PL	2
	10395	**Lock Nut** 1/2 NC, PL	2
30	0789	**Scraper** — LH	8
	100270	**Scraper Blade** 3/16 x 4 x 6	1
	100271	**Scraper Leg** 1/2 x 1-1/2	1
	10785	**Hex Bolt** 1/2 x 1-1/2 — NC, PL	2
	10395	**Lock Nut** 1/2 NC, PL	2
31	10710	**Carriage Bolt** 1/2 x 2 NC, PL	1
32	1222A	**End Gang Washer**	1
33	100098	**Bearing Plate**	1
34	100099	**Spacer Plate**	As Required
35	5622A	**Lock Plate**	1
36	10489	**Nut Gang Bolt** 1-1/2 NF, CH	1
37	9445	**Gang Bolt** 1-1/2 SQ. x 79-7/8 Long	1
38	9480	**Blade** 22 x 3/16 Plain	9
39	9484	**Blade** 22 x 3/16 CO	9
40	10910	**Roll Pin** 5/16 x 2-1/4	1
41	100170	**Scraper Bar Mount** 5/8 x 2 x 12 Long	1
42	10396	**Lock Nut** 7/8 NC, PL	1

REAR INSIDE GANG — HWTF10

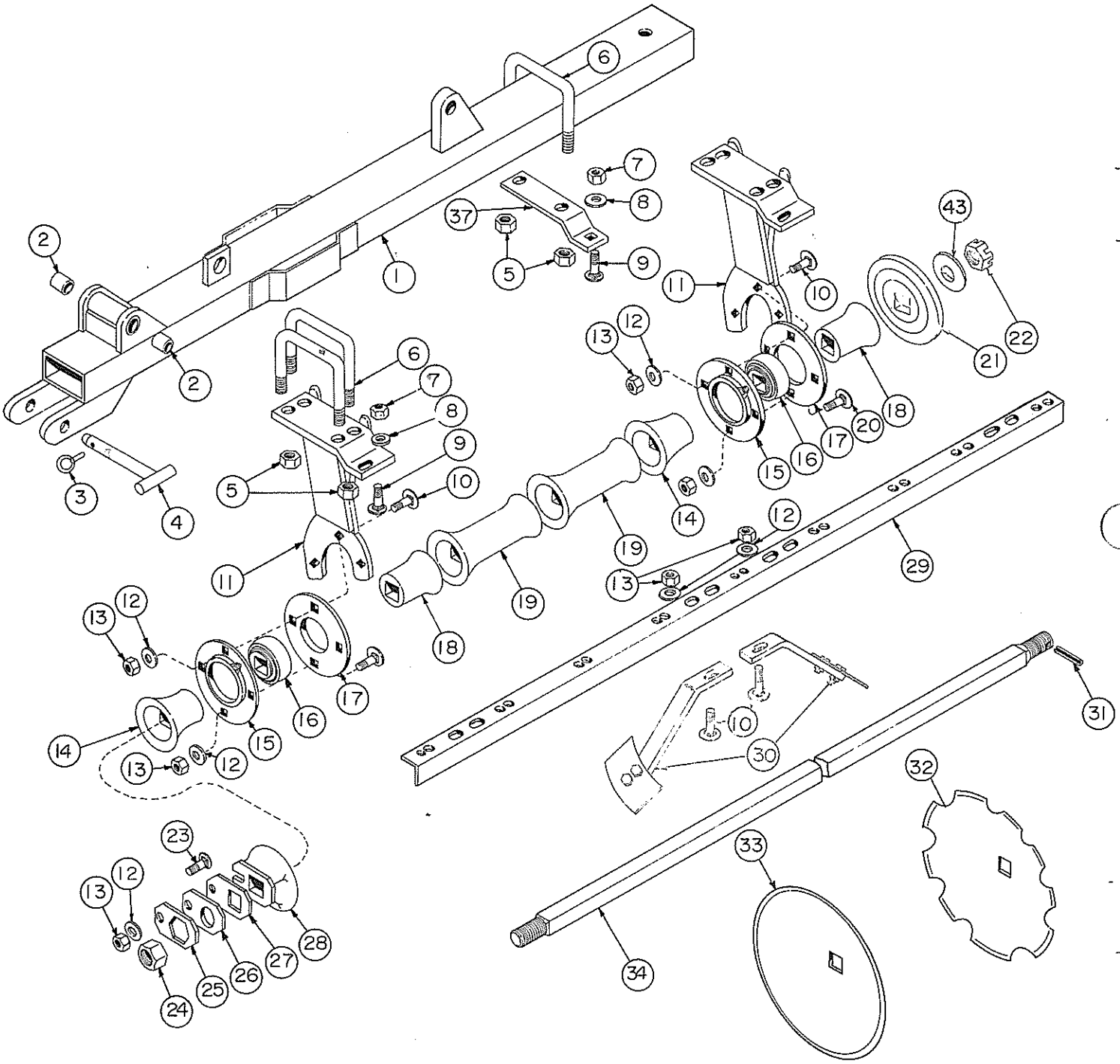

AMCO HWTF10 SERIES DISK HARROW
REAR INSIDE GANG

Ref. No.	Part No.	Description	No. Req'd
1	0762	**Assy Gang Frame** — Rear	1
2	9637	**Bushing** (Faflon) 1-1/2 OD x 1-1/4 ID 1-1/2 L	2
3	10317	**Klik Pin**	1
4	0618	**Assy. Pivot Pin**	1
5	10300	**Lock Nut** 3/4 NC, PL	10
6	6513	**"U" Bolt** 3/4 Dia	5
7	10299	**Lock Nut** 5/8 NC, PL	3
8	10059	**Cut Washer** 5/8 PL	3
9	10135	**Carriage Bolt** 5/8 x 1-3/4 NC, PL	3
10	10870	**Carriage Bolt** 1/2 x 1-1/2 NC, PL, GR5	17
11	0758	**Assy Bearing Riser** FRH, RLH	2
11	0759	**Assy Bearing Riser** FLH, RRH	2
12	10832	**Cut Washer** 1/2 PL	21
13	10395	**Lock Nut** 1/2 NC, PL	21
14	9351	**End Bell** — Large	2
15	10904	**Flangette** G100 MSA2	2
16	10906	**Bearing** GW 211PPP3	2
17	10905	**Flangette** G100MSB2	2
18	9350	**End Bell** — Small	2
19	9272	**Spacer Spool**	5
20	10860	**Carriage Bolt** 1/2 x 1 NC, PL	2
21	2404	**Bumper Washer**	1
22	10226	**Nut Gang Bolt** 1-1/2 NF Slotted	1
23	10710	**Carriage Bolt** 1/2 x 2 NC, PL	1
24	10489	**Nut Gang Bolt** 1-1/2 NF, CH	1
25	5622A	**Lock Plate**	1
26	100098	**Bearing Plate**	1
27	100099	**Spacer Plate**	As Required
28	1222A	**End Gang Washer**	1
29	9921	**Scraper Bar** RH 62-15/16 Long	1
29	9922	**Scraper Bar** LH 62-15/16 Long	1
30	0788	**Scraper** — RH	7
	100270	**Scraper Blade** 3/16 x 4 x 6	1
	100271	**Scraper Leg** 1/2 x 1-1/2	1
	10785	**Hex Bolt** 1/2 x 1-1/2 NC, PL	2
	10395	**Lock Nut** 1/2 NC, PL	2
30	0789	**Scraper** — LH	7
	100270	**Scraper Blade** 3/16 x 4 x 6	1
	100271	**Scraper Leg** 1/2 x 1-1/2	1
	10785	**Hex Bolt** 1/2 x 1-1/2 — NC, PL	2
	10395	**Lock Nut** 1/2 NC, PL	2
31	10910	**Roll Pin** 5/16 x 2-1/4	1
32	9484	**Blade** 22 x 3/16 CO	8
33	9480	**Blade** 22 x 3/16 Plain	8
34	9444	**Gang Bolt** 1-1/2 SQ. 70-5/8 Long	1
35	10872	**Scraper Bar Mount** 5/8 x 2 x 12 Long	1
37	100170	**Washer** 1-3/8	1

FRONT WING GANG — HWTF10

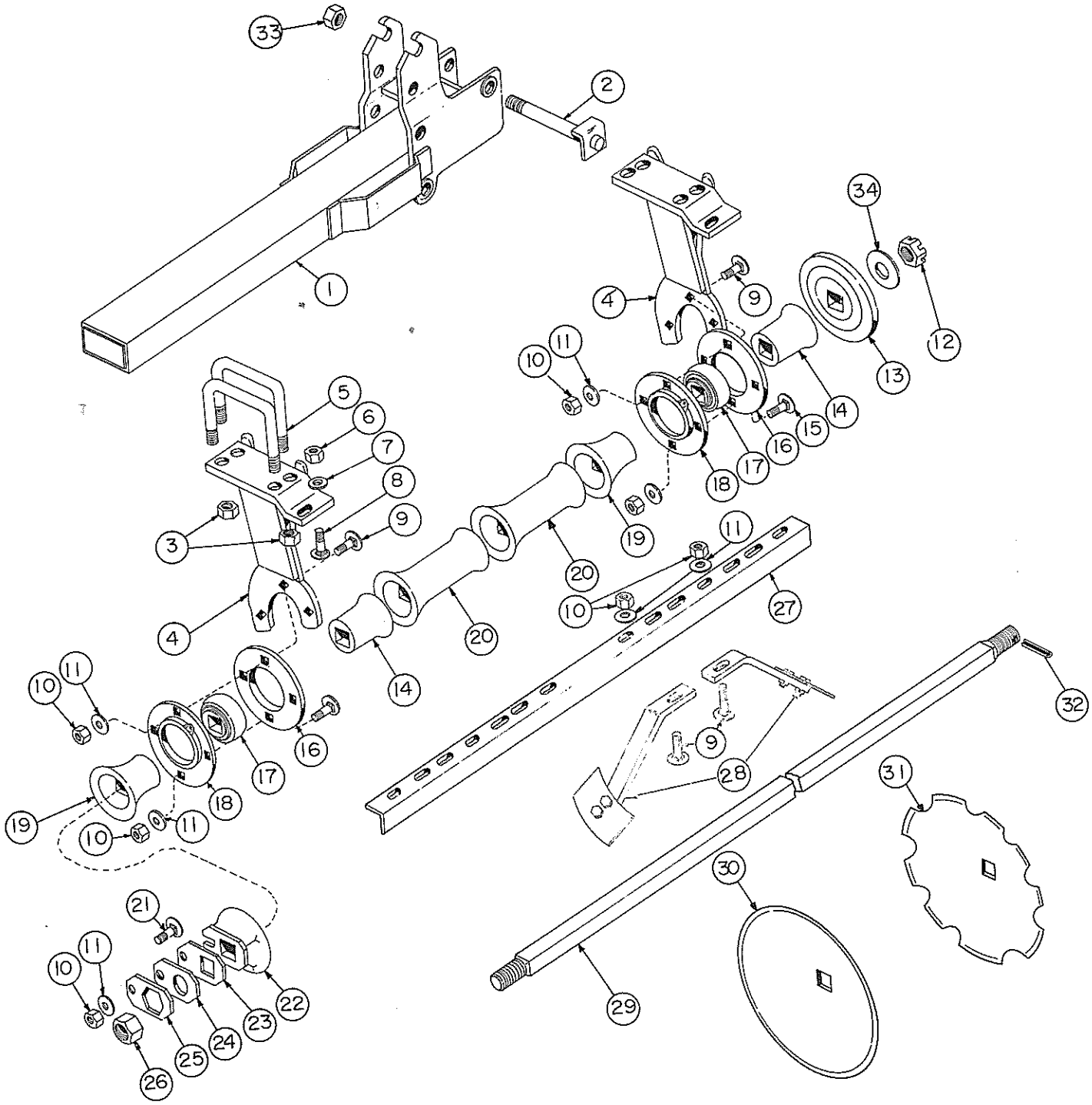

AMCO HWTF10 SERIES DISK HARROW
FRONT WING GANG

Ref. No.	Part No.	Description		No. Required 54 Blade	58 Blade	62 Blade
1	0565A	**Frame** — Wing Gang 4 Blade		1	—	—
1	0564A	**Frame** — Wing Gang 5 Blade		—	1	—
1	0566A	**Frame** — Wing Gang 6 Blade		—	—	1
2	0727	**Assy Pivot Pin**		1	1	1
3	10300	**Lock Nut** 3/4 NC, PL		8	8	8
4	0758	**Assy Bearing Riser** FRH, RLH		2	2	2
4	0759	**Assy Bearing Riser** FLH, RRH		2	2	2
5	6513	**"U" Bolt** 3/4 Dia		4	4	4
6	10299	**Lock Nut** 5/8 NC, PL		2	2	2
7	10059	**Cut Washer** 5/8 PL		2	2	2
8	10135	**Carriage Bolt** 5/8 x 1-3/4 NC, PL		2	2	2
9	10870	**Carriage Bolt** 1/2 x 1-1/2 NC, PL, GR5		10	10	10
10	10395	**Lock Nut** 1/2 NC, PL		11	11	11
11	10832	**Cut Washer** 1/2 PL		11	11	11
12	10226	**Nut Gang Bolt** 1-1/2 NF Slotted		1	1	1
13	2404	**Bumper Washer**		1	1	1
14	9350	**End Bell Small**		2	2	2
15	10860	**Carriage Bolt** 1/2 x 1 NC, PL		2	2	2
16	10905	**Flangette** G100MSB2		2	2	2
17	10906	**Bearing** GW211PPB3		2	2	2
18	10904	**Flangette** G100MSA2		2	2	2
19	9351	**End Bell** — Large		2	2	2
20	9272	**Spacer Spool**		1	2	2
21	10710	**Carriage Bolt** 1/2 x 2 NC, PL		1	1	1
22	1222A	**End Gang Washer**		1	1	1
23	100098	**Bearing Plate**		1	1	1
24	100099	**Spacer Plate**			As Required	
25	5622A	**Lock Plate**		1	1	1
26	10489	**Nut Gang Bolt** 1-1/2 NF		1	1	1
27	9476	**Scraper Bar** 33-5/16		1	—	—
27	9475	**Scraper Bar** 42-1/2		—	1	—
27	9548	**Scraper Bar** 51-11/16		—	—	1
28	0789	**Scraper** LH		4	5	6
	100270	**Scraper Blade** 3/16 x 4 x 6	1			
	100271	**Scraper Leg** 1/2 x 1-1/2	1			
	10785	**Hex Bolt** 1/2 x 1-1/2 — NC, PL	2			
	10395	**Lock Nut** 1/2 NC, PL	2			
28	0788	**Scraper RH**		4	5	6
	100270	**Scraper Blade** 3/16 x 4 x 6	1			
	100271	**Scraper Leg** 1/2 x 1-1/2	1			
	10785	**Hex Bolt** 1/2 x 1-1/2 NC, PL	2			
	10395	**Lock Nut** 1/2 NC, PL	2			
29	9440	**Gang Bolt** 4 Blade 1-1/2 SQ. 33-5/8 Long		1	1	1
29	9441	**Gang Bolt** 5 Blade 1-1/2 SQ. 42-7/8 Long		—	1	—
29	9442	**Gang Bolt** 6 Blade 1-1/2 SQ. 52-1/8 Long		—	—	1
30	9480	**Blade** 22 x 3/16 Plain		3	4	5
30	9481	**Blade** 20 x 3/16 Plain		1	1	1
31	9484	**Blade** 22 x 3/16 CO		3	4	5
31	9487	**Blade** 20 x 3/16 CO		1	1	1
32	10910	**Roll Pin** 5/16 x 21/4		1	1	1
33	10397	**Lock Nut** 1-1/4 NC, PL		1	1	1
34	10872	**Cut Washer** 1-3/8 PLT		1	1	1

REAR WING GANG — HWTF10

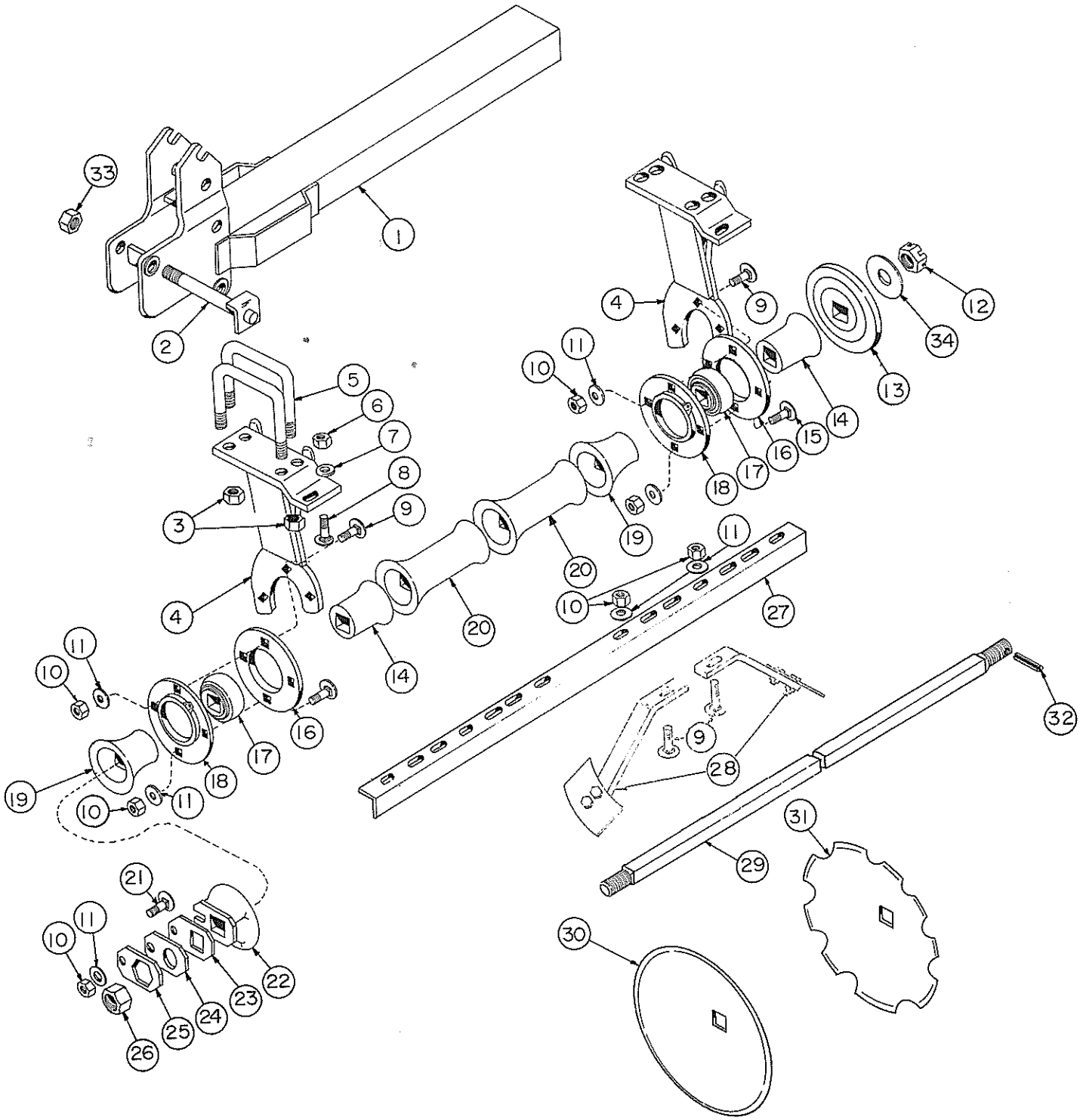

J-16 26024

AMCO HWTF10 SERIES DISK HARROW
REAR WING GANG

Ref. No.	Part No.	Description	No. Required 54 Blade	58 Blade	62 Blade
1	0564A	**Frame** — Wing Gang 5 Blade	1	—	—
1	0566A	**Frame** — Wing Gang 6 Blade	—	1	—
1	0763	**Frame** — Wing Gang 7 Blade	—	—	1
2	0727	**Assy Pivot Pin**	1	1	1
3	10300	**Lock Nut** 3/4 NC, PL	8	8	10
4	0758	**Assy Bearing Riser** FRH, RLH	2	2	2
4	0759	**Assy Bearing Riser** FLH, RRH	2	2	2
5	6513	**"U" Bolt** 3/4 Dia	4	4	5
6	10299	**Lock Nut** 5/8 NC, PL	2	2	3
7	10059	**Cut Washer** 5/8 PLT	2	2	3
8	10135	**Carriage Bolt** 5/8 x 1-3/4 NC, PL	2	2	3
9	10870	**Carriage Bolt** 1/2 x 1-1/2 NC, PL . GR5	12	13	14
10	10395	**Lock Nut** 1/2 NC, PL	13	14	15
11	10832	**Cut Washer** 1/2 PL	13	14	15
12	10226	**Nut Gang Bolt** 1-1/2 NF Slotted	1	1	1
13	2404	**Bumper Washer**	1	1	1
14	9350	**End Bell** Small	2	2	2
15	10860	**Carriage Bolt** 1/2 x 1 NC, PL	2	2	2
16	10905	**Flangette** G100MSB2	2	2	2
17	10906	**Bearing** GW211PPB3	2	2	2
18	10904	**Flangette** G100MSA2	2	2	2
19	9351	**End Bell** Large	2	2	2
20	9272	**Spacer Spool**	3	4	5
21	10710	**Carriage Bolt** 1/2 x 2 NC, PL	1	1	1
22	1222A	**End Gang Washer**	1	1	1
23	100098	**Bearing Plate**	1	1	1
24	100099	**Spacer Plate**		As Required	
25	5622A	**Lock Plate**	1	1	1
26	10489	**Nut Gang Bolt** 1/2 NF	1	1	1
27	9548	**Scraper Bar** 51-11/16	1	—	—
27	9549	**Scraper Bar** 60-7/8	—	1	—
27	9550	**Scraper Bar** 70-1/16	—	—	1
28	0788	**Scraper** — RH	6	7	8
	100270	**Scraper Blade** 3/16 x 4 x 6 — 1			
	100271	**Scraper Leg** 1/2 x 1-1/2 — 1			
	10785	**Hex Bolt** 1/2 x 1-1/2 NC, PL — 2			
	10395	**Lock Nut** 1/2 NC, PL — 1			
28	0789	**Scraper** — LH	6	7	8
	100270	**Scraper Blade** 3/16 x 4 x 6 — 1			
	100271	**Scraper Leg** 1/2 x 1-1/2 — 1			
	10785	**Hex Bolt** 1/2 x 1-1/2 NC, PL — 2			
	10395	**Lock Nut** 1/2 NC, PL — 2			
29	9442	**Gang Bolt** 6 Blade 1-1/2 SQ. 52-1/8 Long	1	—	—
29	9443	**Gang Bolt** 7 Blade 1-1/2 SQ. 61 3/8 Long	—	1	—
29	9444	**Gang Bolt** 8 Blade 1-1/2 SQ. 70-5/8 Long	—	—	1
30	9480	**Blade** 22 x 3/16 Plain	4	5	6
30	9481	**Blade** 20 x 3/16 Plain	1	1	1
30	3055	**Blade** 16 x 11 GA. Plain	1	1	1
31	9484	**Blade** 22 x 3/16 CO	4	5	6
31	9487	**Blade** 20 x 3/16 CO	1	1	1
32	10910	**Roll Pin** 5/16 x 2-1/4	1	1	1
33	10397	**Lock Nut** 1-1/4 NC, PL	1	1	1
34	10872	**Cut Washer** 1-3/8 PLT	1	1	1

FRONT INSIDE GANG — HWTF11

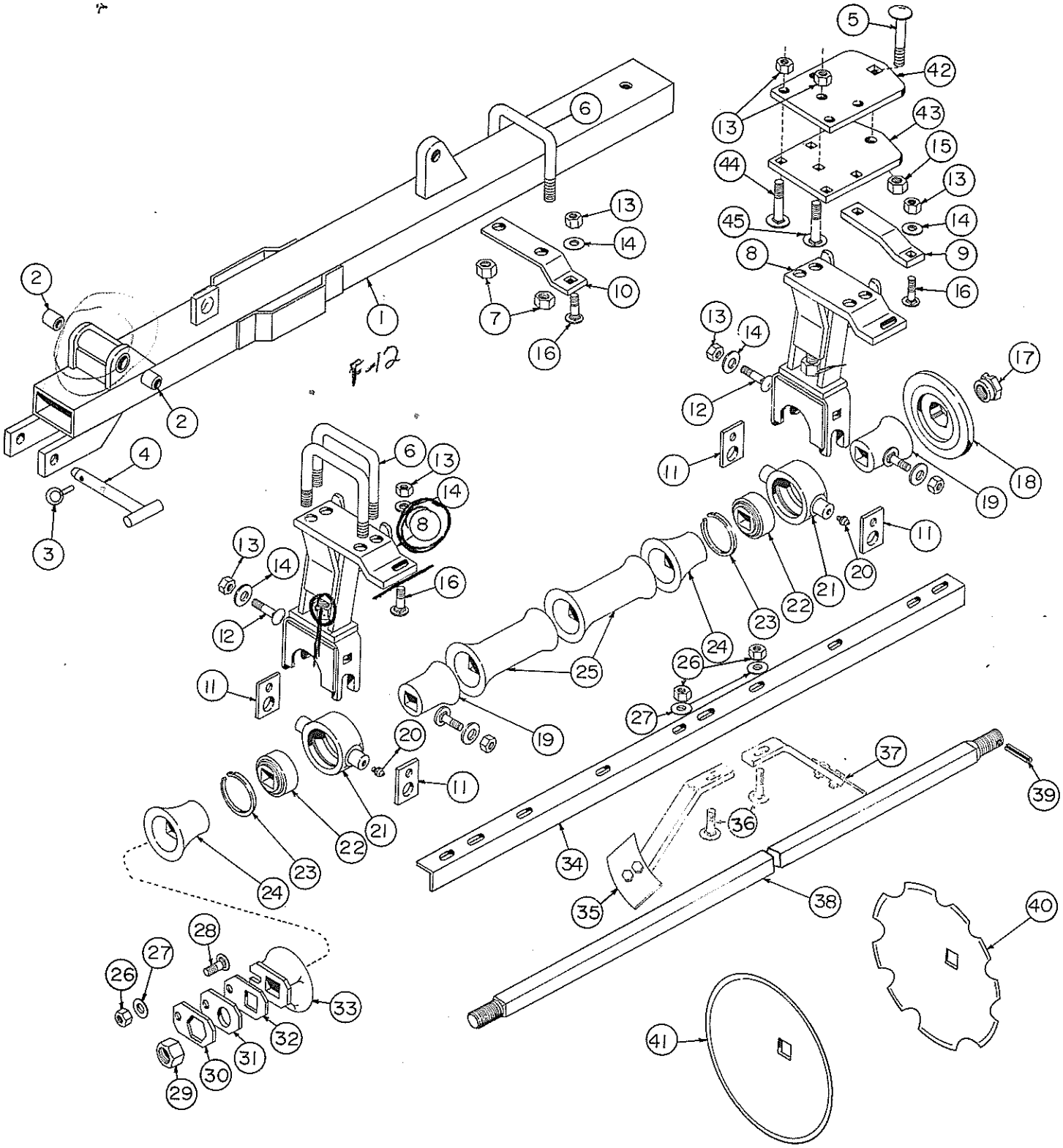

BB-01-0019 THIRD BRG. CONVERSION KIT.

AMCO HWTF11 SERIES DISK HARROW
FRONT INSIDE GANG

Ref. No.	Part No.	Description	No. Req'd
1	0562	**Assy Gang Frame** Front	1
2	9637	**Bushing** [Faflon] 1-1/2 OD x 1-1/4 ID — 1-1/2 Long	2
3	10317	**Klik Pin**	1
4	0618	**Assy Pivot Pin**	1
5	10370	**Carriage Bolt** 7/8 x 5-1/2 NC, PL	1
6	6513	**"U" Bolt** 3/4 Dia	5
7	10300	**Lock Nut** 3/4 NC, PL	10
8	0753	**Assy Bearing Riser** FLH, RRH	2
8	0752	**Assy Bearing Riser** FRH, RLH	2
9	9474	**Scraper Bar Support**	1
10	100170	**Scraper Bar Support** 5/8 x 2 HRMS — 12 Long	1
11	9628	**Clamp Trunion** 3/8 x 2-1/2 HRMS 3-3/4 Long	4
12	10665	**Carriage Bolt** 5/8 x 2 NC, PLT, GR5	4
13	10299	**Lock Nut** 5/8 NC, PLT	13
14	10059	**Cut Washer** 5/8 PLT	8
15	10396	**Lock Nut** 7/8 NC, PL	1
16	10135	**Carriage Bolt** 5/8 x 1-3/4 NC, PL	4
17	9577A	**Nut Gang Bolt**	1
18	9578A	**Bumper Washer**	1
19	9350	**End Bell** — Small	2
	FB-09-0001	**Bearing and Housing** (Fully Assembled)	2
20	10606	**Grease Fitting**	1
21	G2668	**Bearing Housing**	1
22	G11071	**Bearing** (Fafnir GW211PP3)	1
23	11064	**Retainer Ring**	1
24	9351	**End Bell** — Large	2
25	9272	**Spacer Spool**	6
26	10395	**Lock Nut** 1/2 NC, PL	8
27	10832	**Cut Washer** 1/2 PL	8
28	10710	**Carriage Bolt** 1/2 x 2 NC, PL	1
29	10397	**Lock Nut** 1-1/4 NC, PL	1
30	5622A	**Lock Plate**	1
31	100098	**Bearing Plate**	1
32	100099	**Spacer Plate**	As Required
33	1222A	**End Gang Washer**	1
34	9923	**Scraper Bar** RH 72-1/8 Long	1
34	9924	**Scraper Bar** LH 72-1/8 Long	1
35	0789	**Scraper** LH	8
	100270	**Scraper Blade** 3/16 x 4 x 6	1
	100271	**Scraper Leg** 1/2 x 1-1/2	1
	10785	**Hex Bolt** 1/2 x 1-1/2 NC, PL	2
	10395	**Lock Nut** 1/2 NC, PL	2
36	10870	**Carriage Bolt** 1/2 x 1-1/2 NC, PL, GR5	7
37	0788	**Scraper** RH	8
	100270	**Scraper Blade** 3/16 x 4 x 6	1
	100271	**Scraper Leg** 1/2 x 1-1/2	1
	10785	**Hex Bolt** 1/2 x 1-1/2 NC, PL	2
	10395	**Lock Nut** 1/2 NC, PL	2
38	9445	**Gang Bolt** 1-1/2 SQ. 79-7/8 Long	1
39	10910	**Roll Pin** 5/16 x 2-1/4	1
40	9484	**Blade** 22 x 3/16 CO	8
40	2455	**Blade** 22 x 1/4 CO	8
40	3275	**Blade** 22 x 1/4 CO	8
41	9480	**Blade** 22 x 3/16 Plain	8
41	3253	**Blade** 24 x 3/16 Plain	8
41	3276	**Blade** 22 x 1/4 Plain	8
42	5638	**Pivot Plate Upper** 5/8 HRMS 7-1/8 x 10	1
43	5636	**Pivot Plate Lower** 5/8 HRMS 7-1/8 x 10	1
44	10130	**Carriage Bolt** 5/8 x 5 NC, PL	4
45	10073	**Carriage Bolt** 5/8 x 6 NC, PL	1

REAR INSIDE GANG — HWTF11

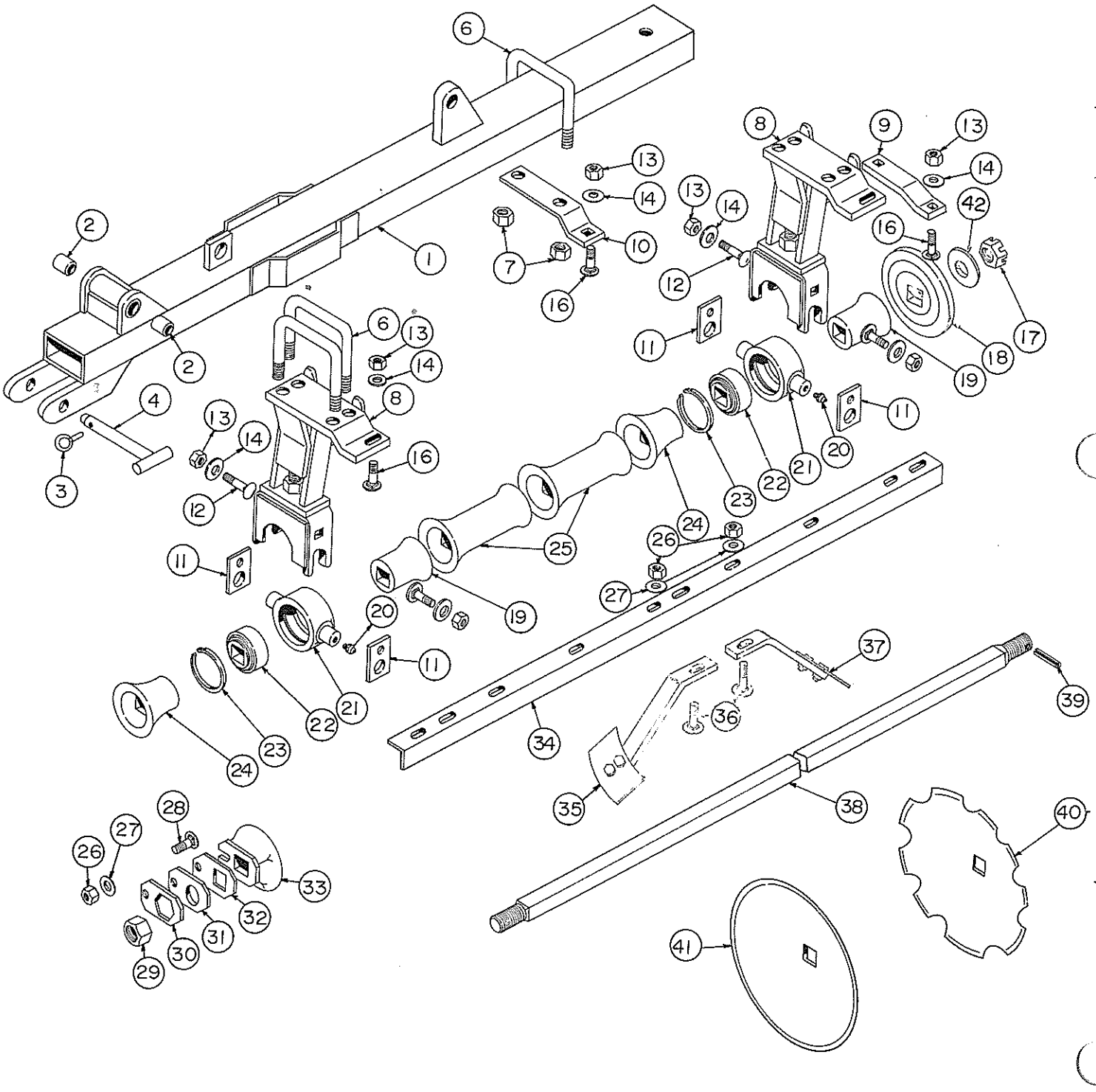

AMCO HWTF11 SERIES DISK HARROW
REAR INSIDE GANG

Ref. No.	Part No.	Description	No. Req'd
1	0762	**Assy Gang Frame** — Rear	1
2	9637	**Bushing [Faflon]** 1-1/2 OD x 1-1/4 ID — 1-1/2 Long	2
3	10317	**Klik Pin**	1
4	0618	**Assy Pivot Pin**	1
6	6513	**"U" Bolt** 3/4 Dia	5
7	10300	**Lock Nut** 3/4 NC, PL	10
8	0753	**Assy Bearing Riser** FLH, RRH	2
8	0752	**Assy Bearing Riser** FRH, RLH	2
9	9474	**Scraper Bar Support**	1
10	100170	**Scraper Bar Support** 5/8 x 2 HRMS - 12 Long	1
11	9628	**Clamp Trunion** 3/8 x 2-1/2 HRMS 3-3/4 Long	4
12	10665	**Carriage Bolt** 5/8 x 2 NC, PLT, GR5	4
13	10299	**Lock Nut** 5/8 NC, PLT	7
14	10059	**Cut Washer** 5/8 PLT	7
16	10135	**Carriage Bolt** 5/8 x 1-3/4 NC, PL	3
17	10226	**Nut Gang Bolt** 1-1/2 NF Slotted	1
18	2404	**Bumper Washer**	1
19	9350	**End Bell** — Small	2
	FB-09-0001	**Bearing and Housing** (Fully Assembled)	2
20	10606	**Grease Fitting**	1
21	G2668	**Bearing Housing**	1
22	G11071	**Bearing** (Fafnir GW211PP3)	1
23	11064	**Retainer Ring**	1
24	9351	**End Bell** — Large	2
25	9272	**Spacer Spool**	5
26	10395	**Lock Nut** 1/2 NC, PL	8
27	10832	**Cut Washer** 1/2 PL	8
28	10710	**Carriage Bolt** 1/2 x 2 NC, PL	1
29	10397	**Lock Nut** 1-1/4 NC, PL	1
30	5622A	**Lock Plate**	1
31	100098	**Bearing Plate**	1
32	100099	**Spacer Plate**	As Required
33	1222A	**End Gang Washer**	1
34	9921	**Scraper Bar** RH 62-15/16	1
34	9922	**Scraper Bar** LH 62-15/16	1
35	0789	**Scraper** LH	1
	100270	**Scraper Blade** 3/16 x 4 x 6	1
	100271	**Scraper Leg** 1/2 x 1-1/2	1
	10785	**Hex Bolt** 1/2 x 1-1/2 NC, PL	2
	10395	**Lock Nut** 1/2 NC, PL	2
36	10870	**Carriage Bolt** 1/2 x 1-1/2 NC, PL, GR5	7
37	0788	**Scraper** RH	7
	100270	**Scraper Blade** 3/16 x 4 x 6	1
	100271	**Scraper Leg** 1/2 x 1-1/2	1
	10785	**Hex Bolt** 1/2 x 1-1/2 NC, PL	2
	10395	**Lock Nut** 1/2 NC, PL	2
38	9444	**Gang Bolt** 1-1/2 SQ 70-5/8 Long	1
39	10910	**Roll Pin** 5/16 x 2-1/4	1
40	9484	**Blade** 22 x 3/16 CO	8
40	2455	**Blade** 24 x 3/16 CO	8
40	3275	**Blade** 22 x 1/4 CO	8
41	9480	**Blade** 22 x 3/16 Plain	8
41	3253	**Blade** 24 x 3/16 Plain	8
41	3276	**Blade** 22 x 1/4 Plain	8
42	10872	**Washer** 1-3/8 PL	1

FRONT WING GANG — HWTF11

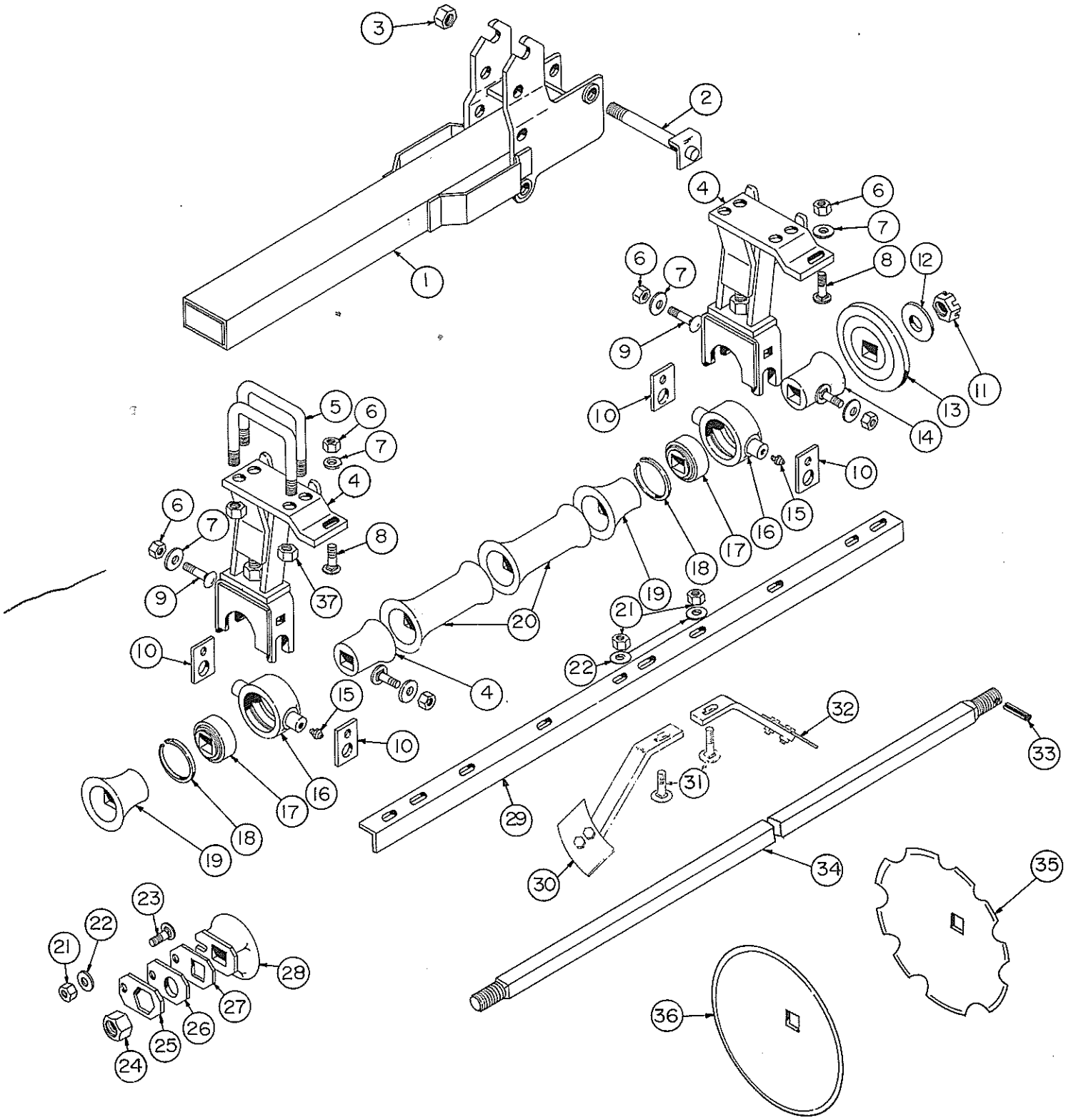

AMCO HWTF11 SERIES DISK HARROW
FRONT WING GANG

Ref. No.	Part No.	Description		No. Required 54 Blade	58 Blade	62 Blade
1	0565A	**Frame** — Wing Gang 5 Blade		1	—	—
1	0564A	**Frame** — Wing Gang 6 Blade		—	1	—
1	0566A	**Frame** — Wing Gang 7 Blade		—	—	1
2	0727	**Assy Pivot Pin**		1	1	1
3	10397	**Lock Nut** 1-1/4 NC, PL		1	1	1
4	0752	**Assy Bearing Riser** FRH, RLH		2	2	2
4	0753	**Assy Bearing Riser** FLH, RRH		2	2	2
5	6513	**"U" Bolt** 3/4 Dia		4	4	4
6	10299	**Lock Nut** 5/8 NC, PLT		6	6	6
7	10059	**Cut Washer** 5/8 PLT		6	6	6
8	10135	**Carriage Bolt** 5/8 x 1-3/4 NC, PL		2	2	2
9	10665	**Carriage Bolt** 5/8 x 2 NC, PLT, GR5		4	4	4
10	9628	**Clamp Trunion** 3/8 x 2-1/2 HRMS 3-3/4 Long		4	4	4
11	10226	**Nut Gang Bolt** 1-1/2 NF Slotted		1	1	1
12	10872	**Cut Washer** 1-3/8 PLT		1	1	1
13	2404	**Bumper Washer**		1	1	1
14	9350	**End Bell** — Small		2	2	2
	FB-09-0001	**Bearing and Housing** (Fully Assembled)		2	2	2
15	10606	**Fitting** — Grease 1/8 NPT Straight	1			
16	G2668	**Housing** — Bearing	1			
17	G11071	**Bearing** — (Fafnir GW211PP3)	1			
18	11064	**Ring** — Snap	1			
19	9351	**End Bell** — Large		2	2	2
20	9272	**Spacer Spool**		1	2	3
21	10395	**Lock Nut** 1/2 NC, PL		5	6	7
22	10832	**Cut Washer** 1/2 PL		6	7	8
23	10710	**Carriage Bolt** 1/2 x 2 NC, PL		1	1	1
24	10397	**Lock Nut** 1-1/4 NC, PL		1	1	1
25	5622A	**Lock Plate**		1	1	1
26	100098	**Bearing Plate**		1	1	1
27	100099	**Spacer Plate**			As Required	
28	1222A	**End Gang Washer**		1	1	1
29	9476	**Scraper Bar** 33-5/16		1	—	—
29	9475	**Scraper Bar** 42-1/2		—	1	—
29	9548	**Scraper Bar** 51-11/16		—	—	1
30	0789	**Scraper** LH		4	5	6
	100270	**Scraper Blade** 3/16 x 4 x 6	1			
	100271	**Scraper Leg** 1/2 x 1-1/2	1			
	10785	**Hex Bolt** 1/2 x 1-1/2 NC, PL	2			
	10395	**Lock Nut** 1/2 NC, PL	2			
31	10870	**Carriage Bolt** 1/2 x 1-1/2 NC, PL, GR5		4	5	6
32	0788	**Scraper** RH		4	5	6
	100270	**Scraper Blade** 3/16 x 4 x 6		1		
	100271	**Scraper Leg** 1/2 x 1-1/2		1		
	10785	**Hex Bolt** 1/2 x 1-1/2 NC, PL		2		
	10395	**Lock Nut** 1/2 NC, PL		2		
33	10910	**Roll Pin** 5/16 x 2-1/4		1	1	1
34	9440	**Gang Bolt** 1-1/2 SQ. 33-5/8 Long		1	—	—
34	9441	**Gang Bolt** 1-1/2 SQ. 42-7/8 Long		—	1	—
34	9442	**Gang Bolt** 1-1/2 SQ. 52-1/8 Long		—	—	1
35	9484	**Blade** 22 x 3/16 CO		3	4	5
35	2455	**Blade** 22 x 3/16 CO		3	4	5
35	3275	**Blade** 22 x 1/4 CO		3	4	5
35	9481	**Blade** 20 x 3/16 Plain		1	1	1
36	3253	**Blade** 24 x 3/16 Plain		3	4	5
36	9480	**Blade** 22 x 3/16 Plain		3	4	5
36	3276	**Blade** 22 x 1/4 Plain		3	4	5
36	9487	**Blade** 20 x 3/16 CO		1	1	1
37	10300	**Lock Nut** 3/4 NC, PL		8	8	8

REAR WING GANG — HWTF11

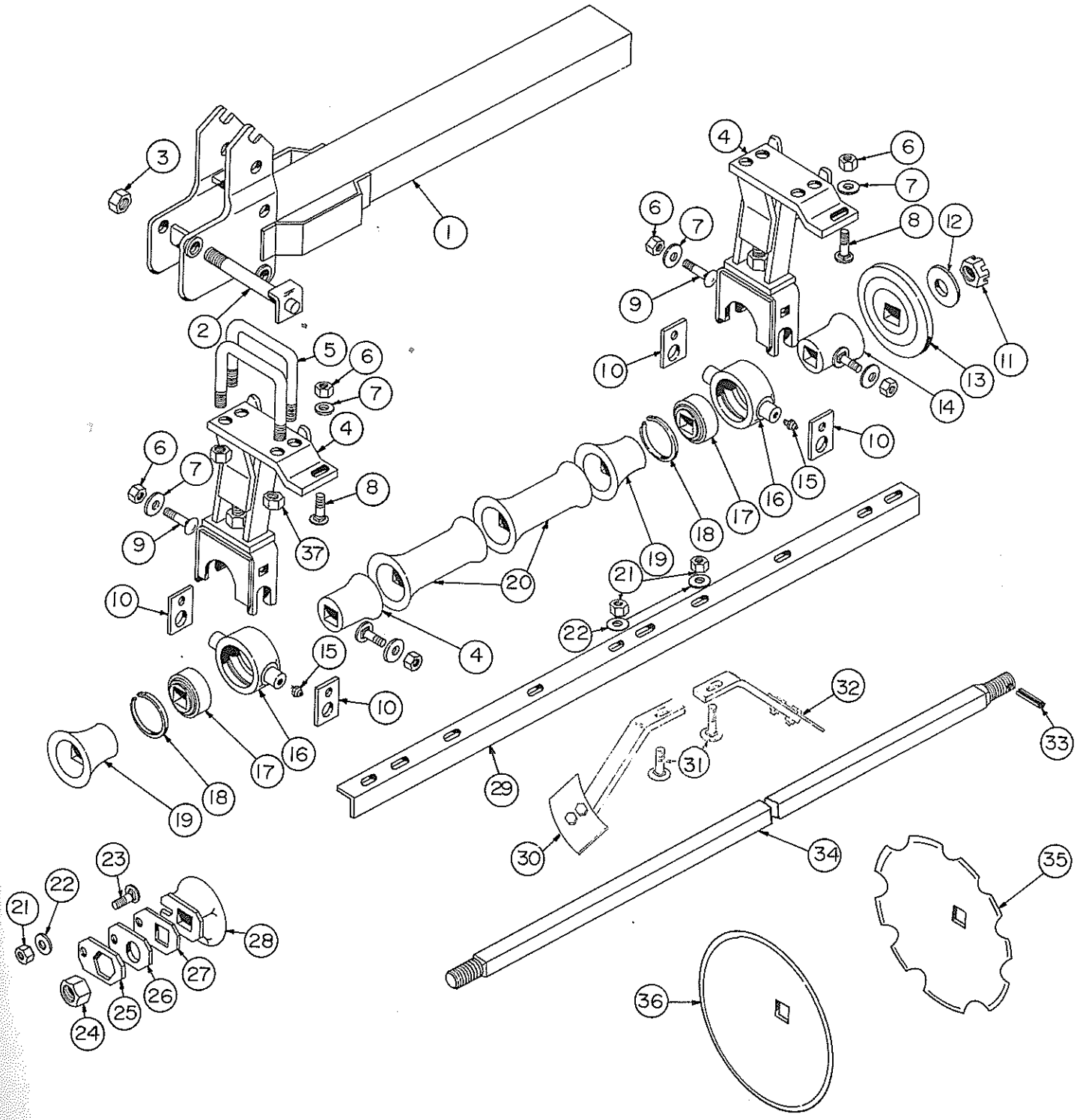

AMCO HWTF11 SERIES DISK HARROW
REAR WING GANG

Ref. No.	Part No.	Description	No. Required 54 Blade	58 Blade	62 Blade
1	0564A	**Frame** — Wing Gang 5 Blade	1	—	—
1	0566A	**Frame** — Wing Gang 6 Blade	—	1	—
1	0763	**Frame** — Wing Gang 7 Blade	—	—	1
2	0727	**Assy Pivot Pin**	1	1	1
3	10397	**Lock Nut** 1-1/4 NC, PL	1	1	1
4	0752	**Assy Bearing Riser** FLH, RRH	2	2	2
4	0753	**Assy Bearing Riser** FRH, RLH	2	2	2
5	6513	**"U" Bolt** 3/4 Dia	4	4	5
6	10299	**Lock Nut** 5/8 NC, PLT	6	6	7
7	10059	**Cut Washer** 5/8 PLT	6	6	7
8	10135	**Carriage Bolt** 5/8 x 1-3/4 NC, PL	2	2	3
9	10665	**Carriage Bolt** 5/8 x 2 NC, PLT, GR5	4	4	4
10	9628	**Clamp Trunion** 3/8 x 2-1/2 HRMS 3-3/4 Long	4	4	4
11	10226	**Nut Gang Bolt** 1-1/2 NF Slotted	1	1	1
12	10872	**Cut Washer** 1-3/8 PLT	1	1	1
13	2404	**Bumper Washer**	1	1	1
14	9350	**End Bell** — Small	2	2	2
	FB-09-0001	**Bearing and Housing** (Fully Assembled)	2	2	2
15	10606	**Grease Fitting** 1			
16	G2668	**Bearing Housing** 1			
17	G11071	**Bearing** –(Fafnir GW211PP3) 1			
18	11064	**Retainer Ring** 1			
19	9351	**End Bell** — Large	2	2	2
20	9272	**Spacer Spool**	3	4	5
21	10395	**Lock Nut** 1/2 NC, PL	7	8	9
22	10832	**Cut Washer** 1/2 PL	7	8	9
23	10710	**Carriage Bolt** 1/2 x 2 NC, PL	1	1	1
24	10397	**Lock Nut** 1-1/4 NC, PL	1	1	1
25	5622A	**Lock Plate**	1	1	1
26	100098	**Bearing Plate**	1	1	1
27	100099	**Spacer Plate**		As Required	
28	1222A	**End Gang Washer**	1	1	1
29	9548	**Scraper Bar** 51-11/16	1	—	—
29	9549	**Scraper Bar** 60-7/8	—	1	—
29	9550	**Scraper Bar** 70-1/16	—	—	1
30	0789	**Scraper** LH	6	7	8
	100270	**Scraper Blade** 3/16 x 4 x 6 1			
	100271	**Scraper Leg** 1/2 x 1-1/2 1			
	10785	**Hex Bolt** 1/2 x 1-1/2 NC, PL 2			
	10395	**Lock Nut** 1/2 NC, PL 2			
31	10870	**Carriage Bolt** 1/2 x 1-1/2 NC, PL, GR5	6	7	8
32	0788	**Scraper** RH	6	7	8
	100270	**Scraper** RH 1			
	100271	**Scraper Leg** 1/2 x 1-1/2 1			
	10785	**Hex Bolt** 1/2 x 1-1/2 NC, PL 2			
	10395	**Lock Nut** 1/2 NC, PL 2			
33	10910	**Roll Pin** 5/16 x 2-1/4	1	1	1
34	9442	**Gang Bolt** 6 Blade 1-1/2 SQ.52-1/8 Long	1	—	—
34	9443	**Gang Bolt** 7 Blade 1-1/2 SQ. 61-3/8 Long	—	1	—
34	9444	**Gang Bolt** 8 Blade 1-1/2 SQ. 70-5/8 Long	—	—	1
35	9484	**Blade** 22 x 3/16 CO	4	5	6
35	2455	**Blade** 24 x 3/16 CO	4	5	6
35	3275	**Blade** 22 x 1/4 CO	4	5	6
35	9487	**Blade** 20 x 3/16 CO	1	1	1
36	9480	**Blade** 22 x 3/16 Plain	4	5	6
36	3253	**Blade** 24 x 3/16 Plain	4	5	6
36	3276	**Blade** 22 x 1/4 Plain	4	5	6
36	9481	**Blade** 20 x 3/16 Plain	1	1	1
36	3055	**Blade** 16 x 11 GA Plain	1	1	1
37	10300	**Lock Nut** 3/4 NC, PL	8	8	10

DECALS

(1)

AMCO

(2)

WARNING

LOWER OR BLOCK HYDRAULICALLY OR MECHANICALLY ELEVATED COMPONENTS.
BEFORE SERVICING OR WHEN LEAVING THE EQUIPMENT

(3)

CAUTION

CHECK TRACTOR HYDRAULIC FLUID LEVEL WITH ALL CYLINDERS EXTENDED PRIOR TO OPERATING DISK.

(4)

MAINTENANCE INSTRUCTIONS

1. Keep all bolts tight.
   A. Visually inspect all bolts daily.
   B. Check after first 50 hours or one week's operations.
2. Keep wheel bearings properly adjusted.
   A. Clean and repack each season or every 300 hours.
   B. Replace all worn or damaged parts when repairing.
3. Do not run with loose disk blades. Keep gang bolts tight! Tighten after first day's operation.
4. Keep scrapers properly adjusted 1/16" - 1/8" from blades.
5. Grease gang bearings every two weeks or 50 hours, at the start of each season, and at the end of each season. Apply with low pressure, low volume hand grease gun. Use a good, clean lithium base grease, Shell Alvania No. 3 or equal. Rotate gangs while greasing for best results.

AMCO HWTF9, 10 AND 11 SERIES DISK HARROW DECALS

Ref. No.	Part No.	Description	No. Req'd
1	10948	**Decal** — AMCO	2
2	10941	**Decal** — Warning	1
3	10947	**Decal** — Caution	1
4	10997	**Decal** — Maintenance	1

THIS SAFETY ALERT SYMBOL INDICATES IMPORTANT SAFETY MESSAGES IN THIS MANUAL. WHEN YOU SEE THIS SYMBOL, CAREFULLY READ THE MESSAGE THAT FOLLOWS AND BE ALERT TO THE POSSIBILITY OF PERSONAL INJURY.

CAUTION *Never stand between tractor and disk harrow when hitching unless all controls are in neutral and the brakes are locked.*

CAUTION *Park or block the disk harrow so it will not roll when disconnected from the tractor drawbar.*

CAUTION *When working on disk harrows, care should be exercised in handling or tightening bolts near disk blades to avoid injury.*

CAUTION *Always secure for transport by using the lock pin and wing lock pins.*

CAUTION *Never clean, adjust or lubricate a disk harrow that is in motion.*

CAUTION *Stay out from underneath wing gangs, when folding or unfolding.*

CAUTION *When transporting machinery over public roads, comply with your local and state laws regarding length, width and lighting.*

CAUTION *When trailing the harrow over public roads, the SMV Emblem must be used, for protection of tractor and motor vehicle operators.*

CAUTION *When transporting farm implements on public roads after dusk it is the responsibility of the operator to provide lighting and reflectors on the rear of the implement in accordance with your state law.*

CAUTION *All hydraulically or mechanically elevated operating components must be blocked to prevent accidental lowering or must be lowered to the ground when making adjustments or when the equipment is idle.*

GENERAL TORQUE SPECIFICATION TABLE (Revised 2-74)

USE THE FOLLOWING TORQUES WHEN SPECIAL TORQUES ARE NOT GIVEN

Note: These values apply to fasteners as received from supplier, dry, or when lubricated with normal engine oil. They do not apply if special graphited or moly-disulphide greases or other extreme pressure lubricants are used. This applies to both UNF and UNC threads.

SAE Grade No.		2		5		8 *	
Bolt head identification marks as per grade NOTE: Manufacturing Marks Will Vary							
Bolt Size		Torque Foot Pounds		Torque Foot Pounds		Torque Foot Pounds	
Inches	Millimeters	Min.	Max.	Min.	Max	Min.	Max.
1/4	6.35	5	6	9	11	12	15
5/16	7.94	10	12	17	20.5	24	29
3/8	9.53	20	23	35	42	45	54
7/16	11.11	30	35	54	64	70	84
1/2	12.70	45	52	80	96	110	132
9/16	14.29	65	75	110	132	160	192
5/8	15.88	95	105	150	180	220	264
3/4	19.05	150	185	270	324	380	456
7/8	22.23	160	200	400	480	600	720
1	25.40	250	300	580	696	900	1080
1-1/8	25.58			800	880	1280	1440
1-1/4	31.75			1120	1240	1820	2000
1-3/8	34.93			1460	1680	2380	2720
1-1/2	38.10			1940	2200	3160	3560

* Thick nuts must be used with Grade 8 bolts

ALL BOLTS SHOULD BE TIGHTENED TO THE RECOMMENDED TORQUES SHOWN IN THE *"GENERAL TORQUE SPECIFICATION TABLE"*

lubrication

Careful and regular attention to lubrication will greatly increase the life of the harrow. For economical and efficient operation, the proper lubrication of the gang bearings, rockshaft retainer pins, wheel bearings and stablizer is essential.

Be sure the pressure fittings are free of dirt or paint before using the pressure gun.' Replace any damaged or missing fittings. Use a good grade of No. 2 grease (Lithium Base). Never use greases which contain metallic additives. Always make sure that grease is clean and not contaminated with dirt or other foreign matter.

The gangs are equipped with ball bearings, which are packed and greased at the factory. They should be greased every week or fifty (50) hours of operation. These bearings must also be greased at the start of each season, and at the end of each season.

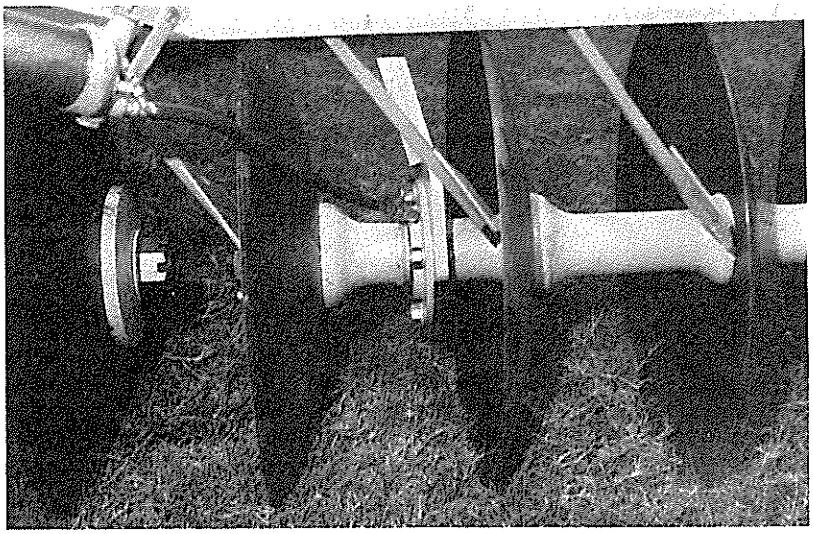

IMPORTANT

Apply grease with low pressure, low volume hand grease gun. Use care to prevent damage to bearing seals.

Grease rockshaft retainer pins each week or every fifty (50) hours of operation. These retainer pins should also be greased at the start of each season and at the end of each season.

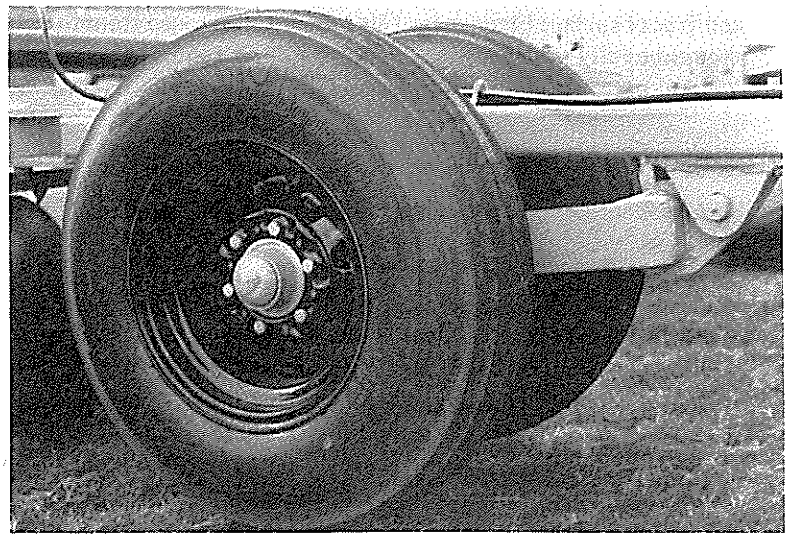

Wheel bearings should be repacked with grease and adjusted annually. Under extreme conditions, they should be serviced more frequently. Check occasionally for excessive end play. Adjust as required to eliminate excessive end play.

To disassemble the hub, remove the wheel, then remove the dust cap by prying around it. Remove the cotter pin, slotted nut and flat washer. Carefully remove the hub and bearings from the spindle. Thoroughly clean and carefully inspect all parts for wear. All parts that appear to be worn or damaged must be replaced.

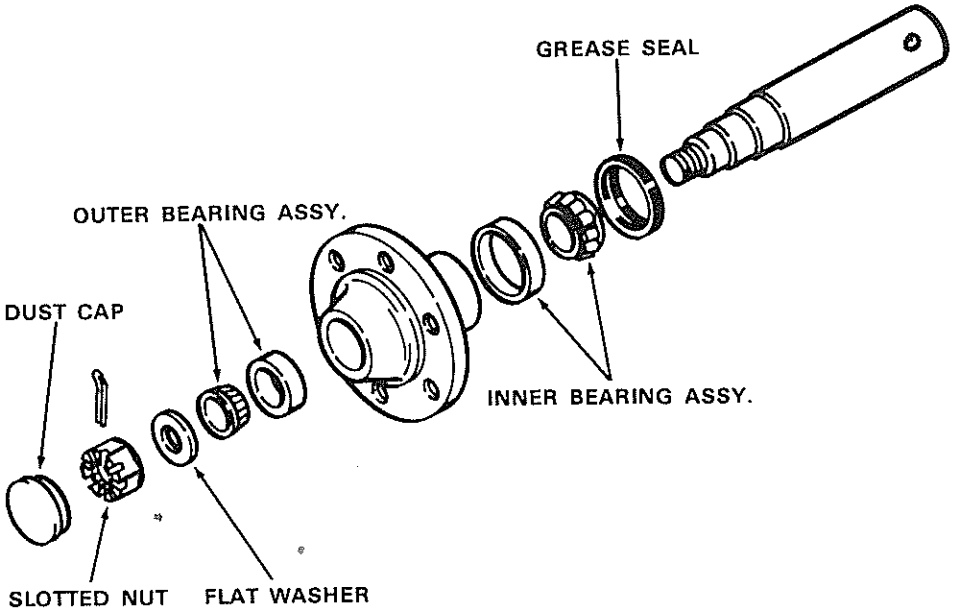

Use the following procedure when repairing or servicing wheel hubs:

1. Clean all parts that are to be re-used.
2. Carefully inspect the metal case on the grease seal. Discard seal if case is bent or damaged. Check seal lips for cuts, tears or excessive wear. Seal must fit snugly on extended inner race of bearing.
3. Carefully inspect both sets of bearing cones. Bearing bore and rollers must be smooth and free of nicks and scratches. Replace cones if damaged.
4. Inspect hub to make sure that hub bolt holes have a full thread. Bearing cups must be smooth and free of surface blemishes. Cups must be removed from the hub and replaced if damaged. Cups should be fully pressed into the hub and rest squarely against the shoulder inside the hub. Hub cap and grease seal should fit snugly inside the hub. Severely damaged hubs should be replaced.
5. Threads on spindle must be in good condition. Bearing cone seats must be smooth and free of blemishes. Bearing cones must fit squarely on spindle.
6. Flat washer, slotted nut, cotter pin and hub cap must be in good condition. Replace if worn or damaged.

To reassemble the hub, repack each bearing cone with grease and fill the hub cavity 1/3 full of grease. Place inner bearing assembly in hub, press grease seal into hub and carefully re-install the hub on the spindle. Install the outer bearing assembly into the hub, and replace the flat washer and slotted nut. Tighten the slotted nut, to seat the bearings, until the hub binds when rotated.

Back the slotted nut off to the nearest slot. Rotate the hub five or six revolutions in each direction to seat all parts. Re-tighten the slotted nut while rotating the hub. When the hub binds, back the slotted nut off to the nearest slot and secure with a cotter pin. Install dust cap and re-mount wheel on hub.

The stabilizer should be greased every week or fifty (50) hours of operation. The stabilizer should also be greased at the start of each season, and at the end of each season. The threads on the stabilizer rod should be oiled occasionally for smooth operation.

operating instructions

ADJUSTMENT FOR LEVEL DISKING

It is recommended the tractor be operated at a speed best suited for soil conditions. High-speed disking will sometimes result in excessive lateral movement of the soil. This may leave an uneven surface behind the disk harrow known as "Ridging" and "Furrowing".

When disking in a cover crop or where the land is to be reworked, an uneven surface is not objectionable. If the land is to be bare through the winter, furrows and ridges will reduce soil washing, and will help catch and hold moisture, resulting in more water being absorbed by the soil.

CENTER RIDGE

If a ridge of soil is left behind the center of the harrow, decrease the angle of the rear gangs, shorten the stabilizer to reduce weight on rear gangs, or do a combination of both.

CENTER FURROW

If a furrow is left behind the center of the harrow, increase the angle of the rear gangs, lengthen the stabilizer to add weight on rear gangs, or do a combination of both.

FEATHERING BLADES

The use of feathering blades will move the excess soil back which is thrown out by the front gangs at high speed. By using the feathering blades, the outside furrows are partially filled, giving a more uniform job disking. Feathering blades are standard equipment and designed into the harrow.

GROUND SPEED AND ADJUSTMENTS

Where it is necessary to have a level job of disking, the following factors must be taken into consideration: (1) Tractor Speed, (2) Hitch Adjustment, and, (3) Disk Gang Angle Adjustment.

TRACTOR SPEED

Speeds above six (6) MPH may result in forming ridges and furrows. Front and rear gang angle adjustment and leveling the harrow from front to rear helps overcome this problem.

HITCH ADJUSTMENT

The frame of the harrow should be level front to rear when the harrow is in operation so the front and rear disk gangs will penetrate the soil uniformly.

To adjust the pull tongue for proper tractor drawbar height, attach pull tongue in upper or lower holes.

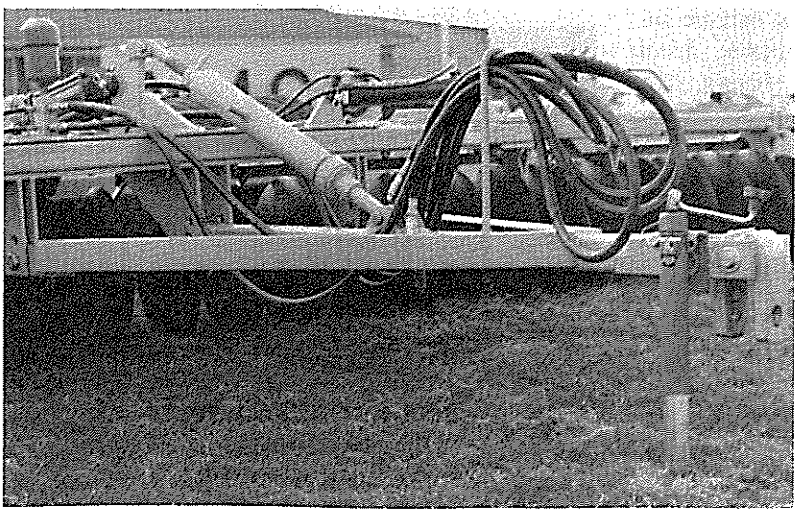

Attach the harrow to the tractor drawbar with the reversible clevis and lower the gangs.

IMPORTANT

Be sure to remove the transport pin from transport position and insert it in the transport bar before lowering gangs.

With the harrow in the ground, turn the stablizer until the frame is positioned for the desired working depth of all gangs. The cushion springs allow the hitch to flex in relation to the main frame.

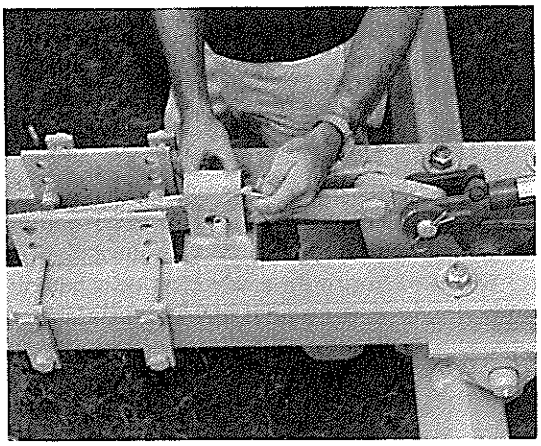

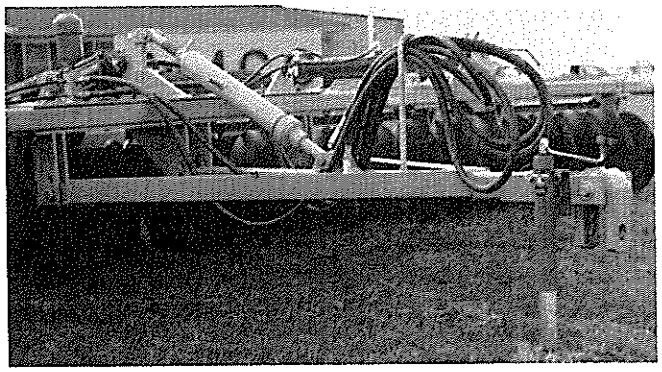

Extending the stabilizer raises the front gangs thus adding weight to the rear gangs. Retracting the stabilizer lowers the front gangs thus adding weight for additional penetration. Adjust the stabilizer to keep the harrow frame level while disking.

DISK ANGLE ADJUSTMENT

The front and rear gang angle may be varied between 15° and 19°. The greater the angle of the gang, the deeper the blades will penetrate the soil. The draft increases as the angle increases. For maximum disk life and operating economy, the gangs should be set at the smallest angle which will do satisfactory disking.

CAUTION ***All hydraulically or mechanically elevated operating components must be blocked to prevent accidental lowering or must be lowered to the ground when making adjustments or when the equipment is idle.***

All four gangs can be independently adjusted from 15° to 19°. Moving the front gangs forward and the rear gangs rearward increases the gang angle. Gang angle can be reduced by moving the front gangs toward the rear and the rear gangs toward the front. Set front and rear gangs in center position initially, then adjust as necessary. Adjust both front gangs evenly. Adjust both rear gangs evenly.

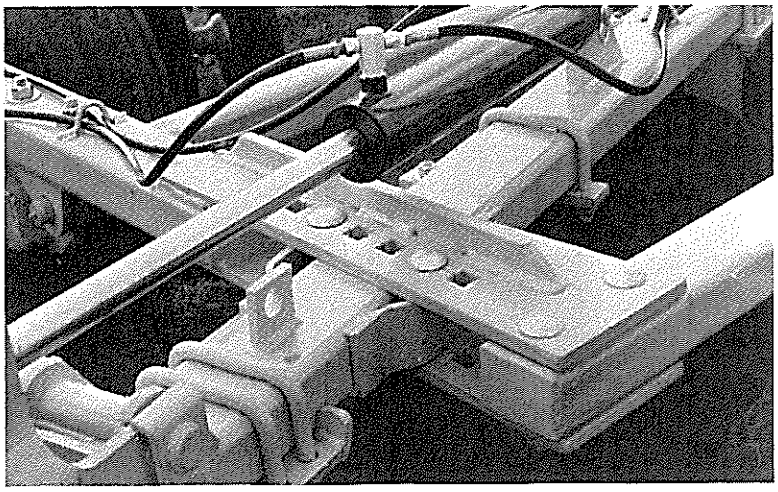

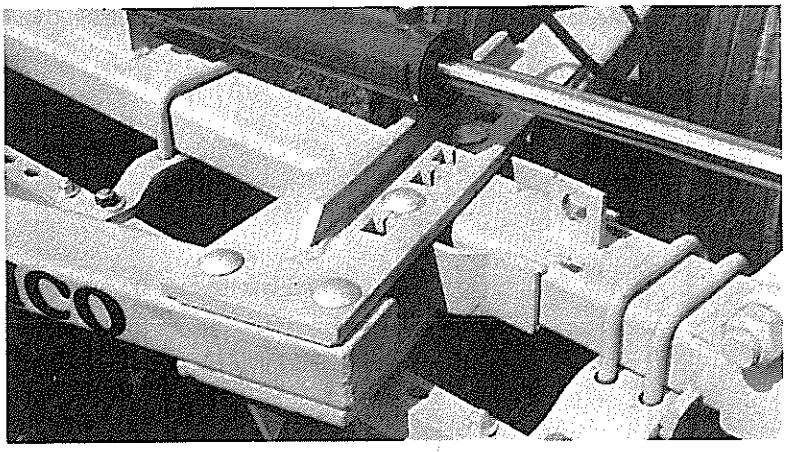

To adjust gang angle remove the two bolts that secure the gang frame. Slide gang frame to desired position and replace both bolts.

To fill a furrow, set the front gangs at minimum angle, and the rear gangs at maximum angle. To cut down a ridge, set the front gangs at maximum angle and the rear gangs at minimum angle.

GANG LATERAL ADJUSTMENT

The front and rear gangs are adjustable laterally to compensate for soil conditions and tractor speed. As an initial setting, it is recommended that the front gangs be adjusted so that bumper washers clear each other by 3/8 to 1/2 inch; and the rear gangs are approximately 34 inches apart, measured from front edge of disk blades.

Make adjustments as needed after the harrow is placed in operation. When a ridge of soil is left behind the center of the harrow, the rear gangs should be set out. When a furrow is formed behind the center of the harrow, the rear gangs should be set in. Slide the gangs either toward the center or toward the outside of the harrow until the desired position has been obtained. Be sure to retighten the bolts to 160-175 foot pounds torque.

It is recommended that the rear gangs be set in at low tractor speeds (below 5 MPH) and set out at high tractor speeds (5 to 6 MPH).

A center tooth attachment is supplied to till the band of soil not moved by the front gangs.

WING GANGS

Each gang is equipped with a 3 x 16 hydraulic cylinder to fold the wings for transport and lower the wings into the working position. The harrow can be operated with the wings folded for additional penetration.

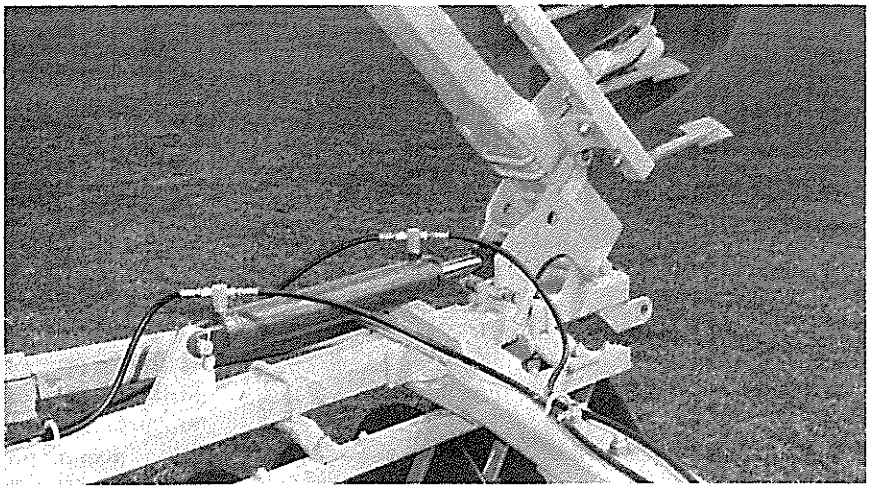

CAUTION *Stay out from underneath wing gangs, when folding or unfolding.*

The wing gangs should be pinned in the folded position for transport or when operating the harrow with the wings folded.

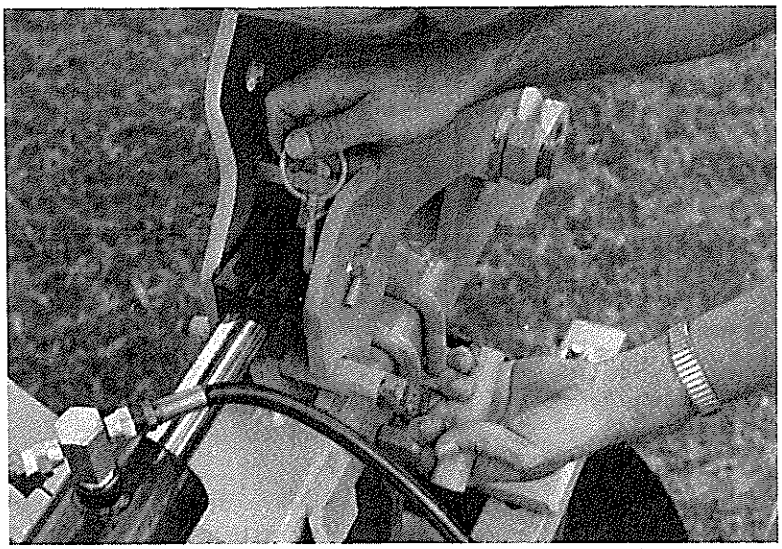

The wings can be lowered by removing the wing transport pin and actuating the four 3 x 16 hydraulic cylinders.

The harrow can be operated as a rigid, non-flexing harrow by installing the wing transport pin in the gang lock holes.

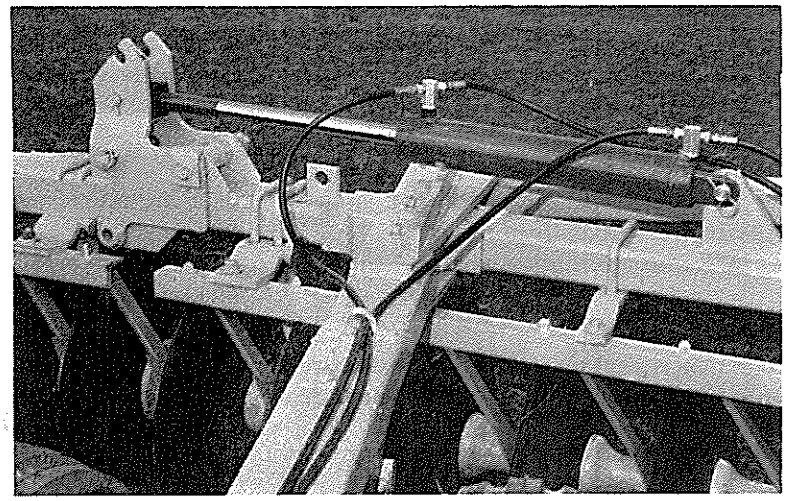

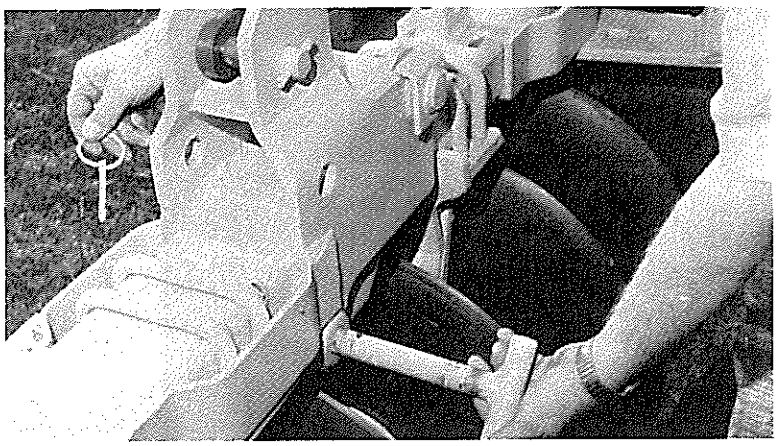

The harrow can be operated as a flex wing harrow by lowering the wings and setting the tractor hydraulic control in the "float" position. This allows the wings to flex over uneven ground. If more wing pressure is needed for more even penetration, the wings can be secured in the lowered position with the accumulator and hydraulic pressure. The accumulator comes filled with 60 cubic inches of nitrogen at a pressure of 900 pounds per square inch. After lowering the wings the tractor hydraulic control lever should be held in the lowering position for 10 to 15 seconds. This allows hydraulic fluid to enter the accumulator. The accumulator then contains about 30 cubic inches of nitrogen and 30 cubic inches of hydraulic fluid at 1800 to 2000 pounds pressure.

Should the wings encounter uneven terrain or an obstruction, the wing cylinder will retract and the excess fluid will be forced into the accumulator. After passing over the obstruction the hydraulic fluid will be forced back into the hydraulic cylinder thus lowering the wings.

The accumulator will also replace any hydraulic fluid that seeps past the hydraulic cylinder pistons or tractor hydraulic control valves. As fluid leaves the accumulator the nitrogen expands and the pressure slowly decreases. The accumulator should be replenished with fluid every 15 to 20 minutes of operation or when the wings start floating up too easily. Move the tractor hydraulic control lever to the lowering position and hold for 15 to 20 seconds. This will replenish the hydraulic fluid in the accumulator.

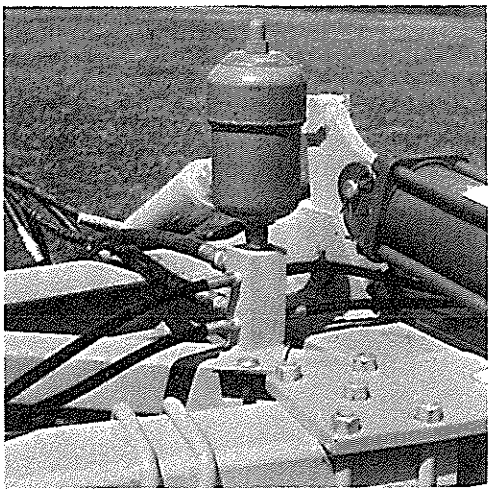

SCRAPERS

Scrapers should be adjusted to run approximately 1/16 to 1/8 inch from the disk blades. Each scraper may be adjusted in the slotted hole on the scraper bar, or the entire scraper bar may be moved laterally in the slotted holes provided in the bearing risers, as shown in the picture at left.

HYDRAULIC CYLINDER

Attach rod end of cylinder in forward hole of rockshaft lift arm and other end to cylinder mount on main frame, as shown in the picture below.

A heavy duty SAE-ASAE 4 x 8 inch stroke hydraulic cylinder, with depth stop, is recommended for raising and lowering the disk harrow. On larger harrows with 24" blades an SAE-ASAE 5 x 8 inch stroke hydraulic cylinder may be required. This will allow use of the harrow on tractors which do not have 2000 p.s.i. hydraulic systems. Optional ASAE standard 8" stroke hydraulic cylinders are available at your local AMCO Dealer.

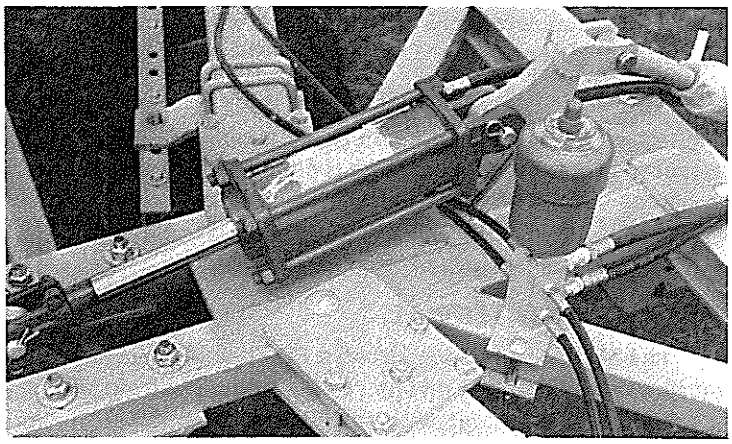

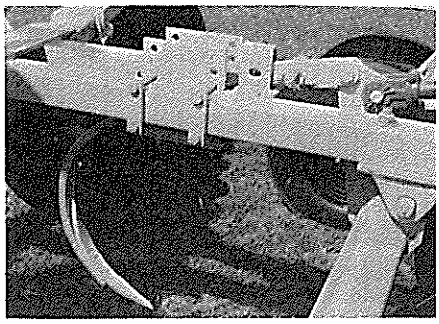

CENTER TOOTH ATTACHMENT

A center tooth attachment is provided to till the band of soil not moved by the front gangs.

Bolt the clamp to the center bars of the main frame, behind the transport strap. Adjusting holes are provided in the clamp for desired depth of spike tooth.

TRANSPORT

CAUTION *Always secure for transport by using the lock pin and wing lock pins.*

Prior to transport the wings must be folded. Remove wing transport pin prior to folding if wings are pinned down in the ridgid position. The wing transport pin should be used to lock the wings in the folded position for transport. The entire harrow should be raised and the transport lock pin installed prior to transporting the harrow.

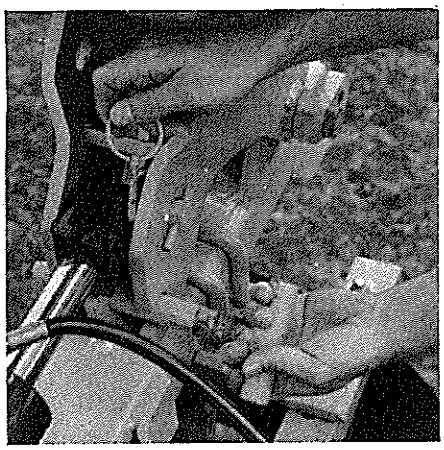

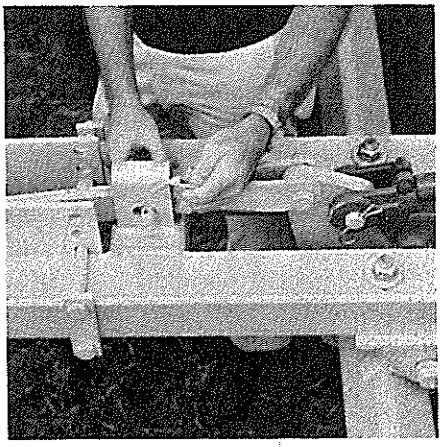

CAUTION *When transporting machinery over public roads, comply with your local and state laws regarding length, width and lighting.*

STORAGE

Proper storage will add to the life of your disk harrow, and assure its being in good condition for the next season. The following procedure is recommended.

Clean off all foreign matter, and lubricate the harrow.

Repaint the harrow where the original paint has worn off.

Coat the disk blades with a rust preventative.

Tighten loose bolts and replace any damaged or missing parts.

All hydraulic cylinder rods should be fully retracted or coated with a rust preventitive to prevent rusting in storage.

WARNING REFLECTORS [OPTIONAL]

Attach a reflector with both red and amber reflective surfaces as near as possible to the extreme left rear part of the harrow. Mount the reflector so the red reflective surface is visible from the rear and the amber surface visible from the front.

Attach another reflector as near as possible to the extreme right rear part of the harrow with the red reflective surface visible from the rear.

SMV EMBLEM [OPTIONAL]

The SMV (Slow Moving Vehicle) Emblem is a recommended attachment that should be added to your harrow. The SMV Emblem can be purchased from your Authorized AMCO Dealer. Check your state and local laws regarding the placement and use of the SMV Emblem.

CAUTION *When trailing the harrow over public roads, the SMV Emblem must be used, for protection of tractor and motor vehicle operators.*

WARNING LAMP

CAUTION *When transporting farm implements on public roads after dusk, it is the responsibility of the operator to provide lighting and reflectors on the rear of the implement in accordance with your state law.*

A warning lamp to be mounted on the extreme left hand rear of the disk harrow is available at your local AMCO Dealer.

maintenance

1. Keep all bolts tight.
   A. Check before placing in service.
   B. Visually inspect all bolts daily.
   C. Check after first 50 hours or one week's operation.
   D. Check each season.

2. Keep wheel bearings properly adjusted.
   A. Check often.
   B. Clean and repack each season or every 300 hours.
   C. Replace worn or damaged parts.
   D. In dis-assembling and re-assembling the wheel hub assemblies, care must be taken to not damage the grease seal lips. In re-assembly, to seat the bearings, carefully tighten the hex nut until the hub drags. Rotate hub to help seat the bearing cups and cones. Re-tighten the hex nut until the hub drags, then back off the hex nut to the nearest slot and secure with cotter pin.

3. Do not run with loose disk blades. Keep gang bolts tight! Tighten gang bolts to 900-1000 ft-lbs of torque.

4. Keep scrapers properly adjusted 1/16" — 1/8" from blades.

5. Grease gang bearings and rockshaft retainer pins every week or 50 hours, at the start of each season, and at the end of each season. Apply with low pressure, low volume hand grease gun. Use a good No. 2 gun grease (Lithium Base). Rotate gangs while greasing for best results. **CAUTION! Use care to prevent damage to seals.**

6. Approximately three (3) gallons of hydraulic fluid is required to fill the harrow hydraulic system. **CAUTION! Check the tractor hydraulic fluid level after all cylinder rams have been extended. Add fluid as necessary.**

7A. Disk Blade, Bearing and Spool Replacement for HWTF10 Harrows (Flangette Mounted Bearings).
   A. Remove the bolts that hold the flangettes to the bearing riser.
   B. Raise the harrow and roll the disk gang away from the frame.
   C. Remove the gang nut lock plate.
   D. Remove the gang hex nut from the end of the axle shaft.
   E. Slide off the bearing spools, spacers and blades.
   F. Avoid thread damage.
   G. Install new blades.
   H. To replace bearing, remove all flangette bolts, clean flangettes, check flangettes for wear. Check flangettes on new bearing. They must be tight enough to hold bearing snug. Discard flangettes if not in good condition.
   I. Re-install bearing spools, spacers, and blades.
   J. Install gang shaft hex nut. IMPORTANT: Tighten nut to 900-1000 ft-lbs.
   K. Install gang nut lock plate.
   L. Attach gang to harrow by bolting flangettes to bearing risers.
   M. Lubricate bearings (See lubrication section).
   N. Rotate gang to be sure it turns freely. The bearings must be in proper alignment to prevent unnecessary wear.

7B. Disk Blade, Bearing, and Spool Replacement for HWTF11 Harrows (Trunnion Mounted Bearings).
   A. Remove the nuts that hold the gang bearing housing trunnion clamps.
   B. Remove clamps.
   C. Raise the harrow and roll the disk gang away from the frame.
   D. Remove the gang nut lock plate.
   E. Remove the gang hex nut from the end of the axle shaft.
   F. Slide off the bearing spools, spacers, and blades.
   G. Avoid thread damage.

H. Install new blades.
I. To replace bearing, remove snap ring from housing.
J. Press out bearing.
K. Clean and wash out old grease.
L. Press new bearing into housing. Install snap ring. Check location of grease hole in outer ring of bearing. This hole must aline with grease groove in housing.
M. Re-install bearing spools, spacers, and blades.
N. Be sure bearing housing grease fitting faces to the rear.
O. Be sure snap ring is toward convex (back) side of blade.
P. Install gang shaft hex nut. IMPORTANT: Tighten nut to 900-1000 ft.-lbs.
Q. Install gang nut lock plate.
R. Re-install gang to standards with hanger trunnion clamps.
S. Lubricate bearings (see lubrication section).
T. Rotate gang to be sure it turns freely. The bearings must be in proper alignment to prevent unnecessary wear. Bearing risers must be properly spaced to prevent bearing pre-load and pre-mature bearing failure.

8. Proper storage will add life to your disk harrow. To prepare for storage:
   A. Clean and lubricate the machine.
   B. Inspect and note excessively worn or broken parts so that repair or replacement can be made promptly.
   C. Repaint where necessary and protect all unpainted surfaces with rust-preventative grease or oil.
   D. Tighten loose bolts.
   E. All hydraulic cylinder rods should be fully retracted or coated with a rust preventitive to prevent rusting.

9. Have dealer check accumulator each season to maintain proper charge. Use DRY NITROGEN to maintain 800-1000 pounds nitrogen pressure per square inch. Check nitrogen pressure with pressure removed in the hydraulic system. Charging kit is required to check nitrogen pressure and to add nitrogen.
   Accumulator can be damaged by operation without nitrogen precharge.

10. Charging the Accumulator.
    Hydraulic pressure in the disk harrow wing lift system must be removed before recharging or checking the nitrogen pressure in the accumulator. Refer to picture at right.
    A. Remove the valve guard and valve cap on the charging side of the accumulator.
    B. Retract shaft in the recharge adapter by turning the handle counter-clockwise until it stops rotating.
    C. Attach gauge assembly and adapter to accumulator valve stem.
    D. Attach gland nut of recharge hose assembly to nitrogen bottle and tighten.

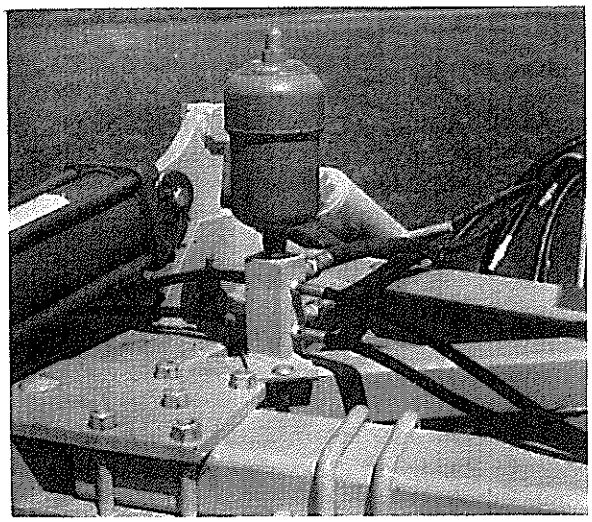

    E. Attach other end of recharge hose to gauge assembly and hand tighten to prevent gas leakage. Turn handle clockwise on adapter to depress nitrogen valve core.
    F. Open valve slowly on the nitrogen bottle to precharge the accumulator to 900 p.s.i. Close nitrogen bottle valve occasionally to allow needle on pressure gauge to give an accurate reading. Bleeder valve under pressure gauge should be used to let out excess pressure.

CAUTION *Nitrogen bottle valve must be turned slowly and carefully to prevent damage to the charging assembly.*

G. To remove the gauge assembly, retract the shaft in the adapter by turning handle counter-clockwise. Open bleeder valve to remove pressure in gauge assembly and hose. Remove adapter from accumulator and check for leaks. Replace valve cap and guard and tighten finger tight, then tighten 1/2 turn with wrench to seal charging valve. Then replace acorn nut on top of accumulator.

H. The accumulator can be removed and taken to the dealer for recharging. Refer to picture at right.

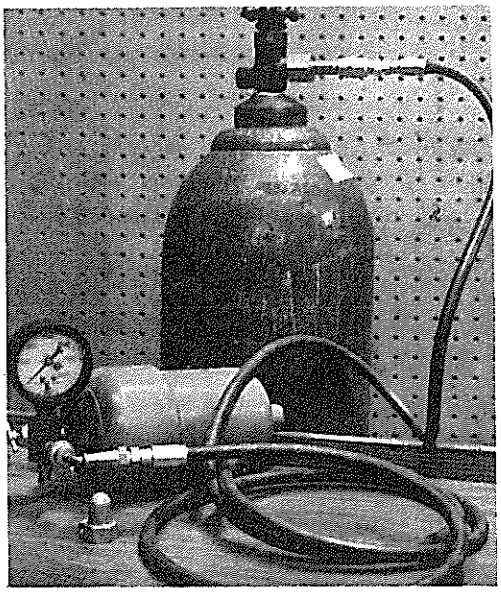

11. Hydraulic Circuit Testing:

A. Hydraulic Circuit assembly: Refer to page 57 of the operators manual for proper assembly of the hydraulic circuit. The circuit must be assembled as shown to assure proper operation.

B. Leaking Hoses or Hydraulic Fittings: A roll of teflon tape is included in each hydraulic kit. Use 1½ to 2 wraps of tape on the threads of each fitting to eleminate fitting leakage. Fittings that continue to leak after tightening should be replaced.

C. Proper System Function:

(1.) If all wings will not raise and lower properly check the hydraulic circuit for proper assembly.

(2.) If wings will not stay in raised position, or creep up during operation the circuit components should be checked as follows:

(a.) Accumulator: Remove cover and check for accumulator charge. Slightly depress the filler valve core. A slight hiss of escaping nitrogen denotes a charged accumulator. (Be careful to prevent excessive loss of nitrogen.) Replace the cover IF THE ACCUMULATOR IS PROPERLY CHARGED. Tighten the small cover finger tight then use a wrench to tighten ¼ to ½ turns to assure proper sealing. Then install the acorn nut. Uncharged accumulators should be recharged or replaced.

(b.) Cylinder Piston Leakage: Remove hoses and fittings from the rod end of the four cylinders. Apply 1,800 to 2,000 p.s.i. pressure to the hydraulic circuit for 30 to 60 seconds. Oil will escape from the open port on the rod end of defective cylinders. These cylinders can be repaired with a Cylinder Repair Kit.

(c.) Tractor Hydraulic System: If problems continue after checking the hoses, fittings, accumulator and cylinders the tractor hydraulic system should be checked. The tractor must maintain at least 1,600 PSI hydraulic pressure to properly operate the folding wings. Also, seepage past the tractor's hydraulic valves will allow wings to creep up during operation.
This problem can be corrected by installing a "PRESSURE LOCK VALVE" between the tractor and the manifold on the harrow. This valve will block fluid seepage from the harrows hydraulic circuit. (AMCO part number 11109.)

12. Hydraulic Cylinder Repair:

A. Remove hoses and fittings from cylinder.

B. Remove cylinder from harrow and clean outside of cylinder.

C. Dis-assemble cylinder by rotating gland on rod end of cylinder. Use a spanner wrench to ROTATE GLAND AND REMOVE SQUARE RETAINER RING THROUGH SLOT IN end of cylinder barrel.

D. Pull cylinder rod to slip rod, gland and piston out of barrel.

E. Remove nut on end of rod then slip piston and gland off rod.

F. Carefully clean and inspect all parts for wear or damage. Small nicks, scratches or blemishes on rod and inside of barrel should be smoothed with fine steel wool or emory cloth.

G. Remove all O' Rings and "U" cups from piston and gland. Replace all seals with new parts.

H. Assemble cylinder using care to prevent damage to O' Rings and "U" cups.

I. Replace cylinder on harrow and attach hoses. Check cylinder for leaks as described on previous page.

assembly instructions

The harrow is shipped from the factory with maximum pre-assembly in the following bundles:

A. Main Frame and Side Bars
B. Pull Tongue
C. Rockshaft
D. Cross Bars
E. 4 — 15 x 8 6-Hole Wheels
F. 4 — 3 x 17 Hydraulic Cylinders
G. Accumulator
H. Box of Hydraulic Components
I. Center Tooth Attachment
J. Front Gang — R.H.
K. Front Gang — L.H.
L. Rear Gang — R.H.
M. Rear Gang — L.H.

1. Place all bundles where they will be convenient. Arrange loose parts so they may be readily seen when needed. To insure good alignment of the units and parts, always insert all bolts leaving the nuts loose. Tighten the nuts evenly to prevent misalignment, distortion, or binding. Be sure all bolts are tight, all cotter pins properly spred and all pins properly inserted.

2. Select clean level area for assembly. Place main frame on sturdy stands at least 30" high. Place on front and rear to clear gang frames.

CAUTION *Use sturdy stands to prevent frame from falling.*

3. Attach four gang frames to main frame. Use four 7/8 x 5-1/2 carriage bolts.

4. Shift front gang frames to front and rear gang frames to rear. Install both side bars and shift the gang frames into position. Secure with eight 7/8 x 5-1/2 carriage bolts. Tighten bolts snugly but not tight.

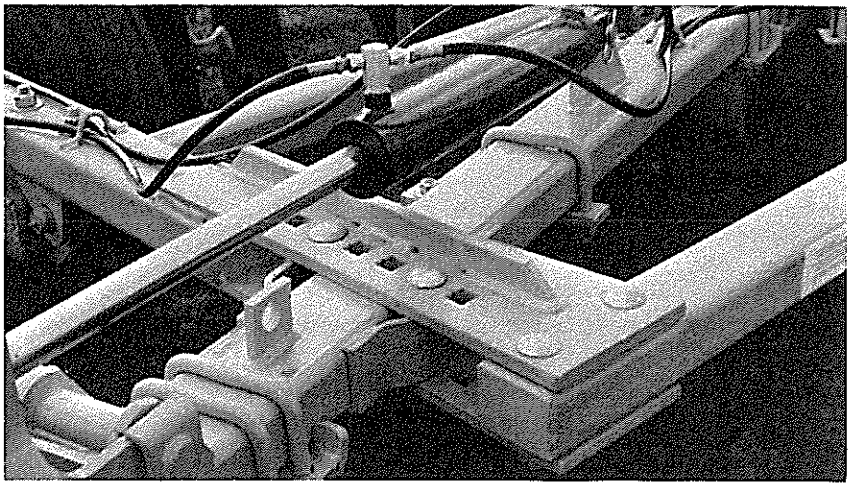

5. Install front and rear cross bars. Insert eight 5/8 x 5 carriage bolts to attach cross bars to main frame. Attach cross bars to side rails with eight 7/8 x 5-1/2 carriage bolts. Use pry bars and drift pins to square and aline frame. Tighten bolts snug but not tight.

6. Move rockshaft into position under center of main frame. Bolt to main frame—snugly— but not tight! Use eight 3/4 x 5 bolts and 16 cut washers. The eight 3/4 x 5 bolts must be installed with the nuts on top of the main frame. A cut washer should be used under the head and under the nut on each bolt.

7. Mount four 9.5L x 11L x 15 high flotation tires and tubes on the four 15 x 8 wheels. Consult tire manufacturer for proper tire inflation pressure.

8. Remove hub bolts. Bolt wheels to hub, tighten bolts evenly to assure proper alignment of wheels.

9. Attach center tooth to main frame approximately 10 inches behind rockshaft. Bottom tip of spike should be even with bottom of disk blades.

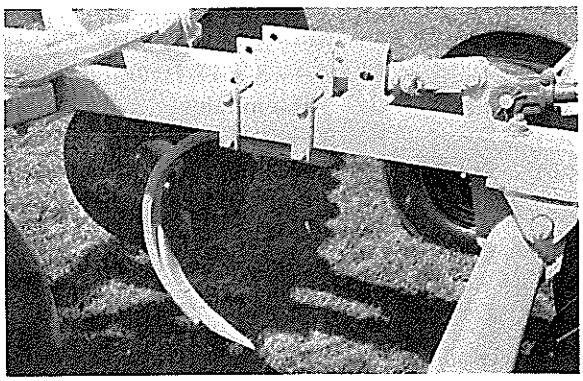

10. Attach four 3 x 16 hydraulic cylinders to mounting holes on gang frames. Cylinder rods should be attached to the wings.

11. Attach hydraulic manifold to main frame. Remove plugs from holes.

12. Route hydraulic hoses through hose supports and connect all fittings and hoses. Use telfon tape to wrap all fittings and prevent hydraulic fluid leaks. One and one half to two wraps of telfon tape should be used. Tape should be at least 1/16" from end of fittings.

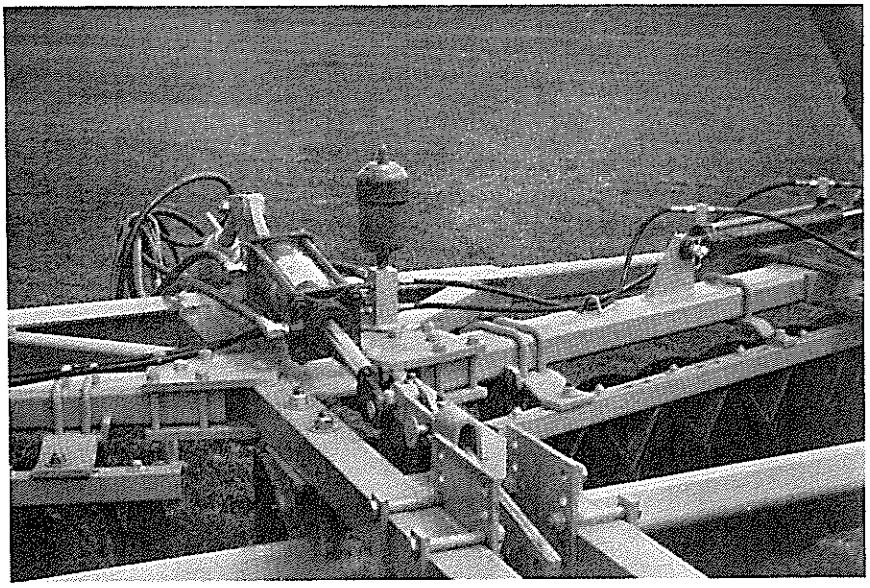

13. Install accumulator on top of manifold. Check accumulator for 800-1000 p.s.i. nitrogen pre-charge. Add nitrogen if necessary.

CAUTION! Be sure hydraulic hoses are routed properly to assure proper performance and prevent damage to hoses when folding wings or actuating the rockshaft.

(Hydraulic Circuit Diagram on Next Page)

HYDRAULIC CIRCUIT DIAGRAM

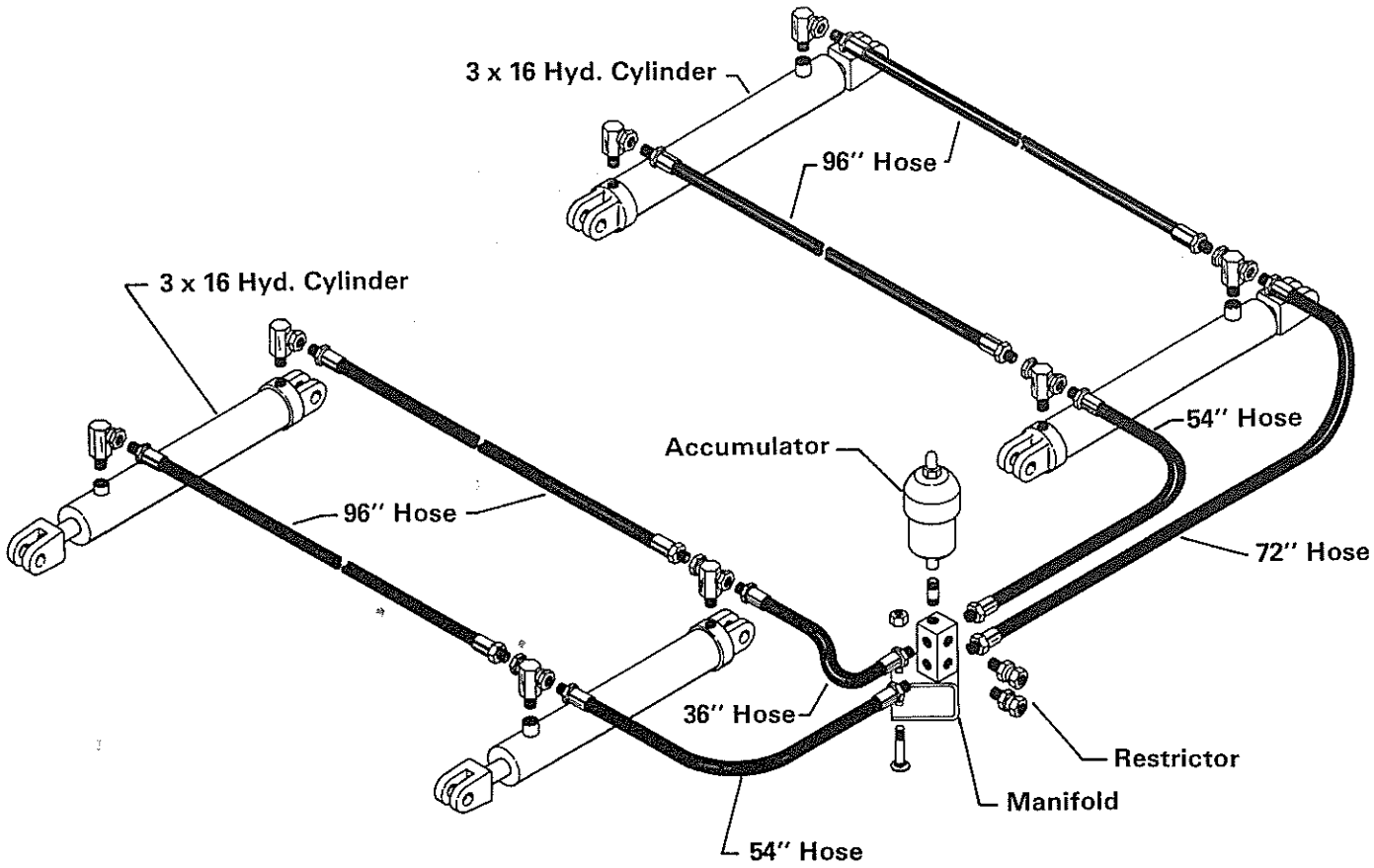

14. Attach hitch tongue using lower holes in main frame. Tighten bolts. Adjust later if necessary to match tractor drawbar.

15. Attach stabilizer to hitch control bracket.

16. Attach hose holder to hitch tongue.

17. Attach hitch jack to hitch tongue.

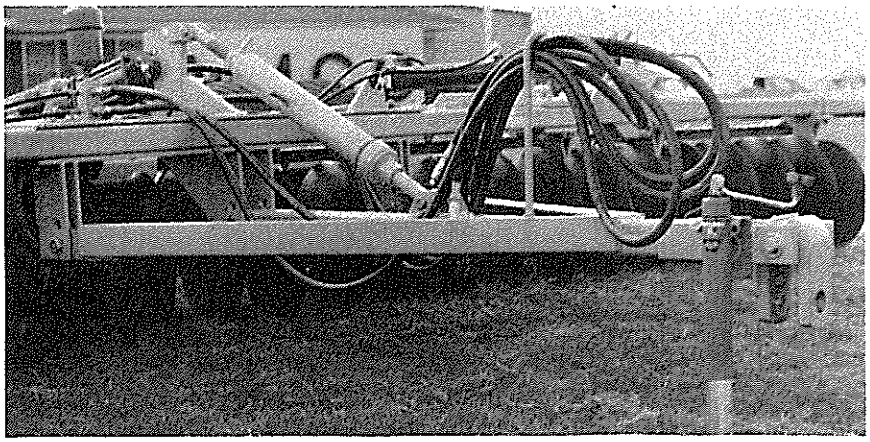

18. Check each scraper for proper adjustment. Place scraper 1/16" - 1/8" from blades. Rotate gangs to check for scrapers rubbing on blades.

19. Attach four (4) hoses (approximately 120") and breakaway couplings from tractor to hydraulic manifold on harrow.

[NOTE: Hoses and couplings not provided with harrow]

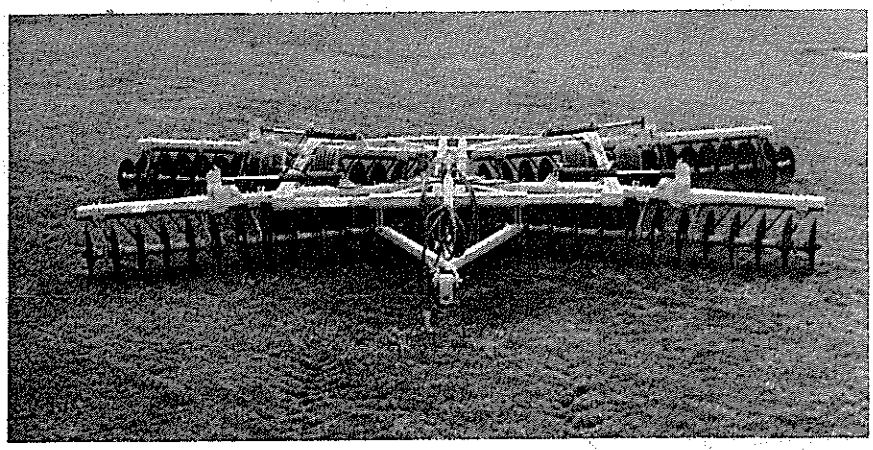

20. Check the harrow to be sure all bolts are tight, cotter pins spread, pins in place and that the gangs rotate freely.

21. All bolts, including wheel bolts, should be checked after initial field use.