AMCO®
SUPER-TILL™

Do-Alls & Seedbed Conditioners

TEMPORARY

ASSEMBLY - OPERATION - MAINTENANCE

INSTRUCTIONS

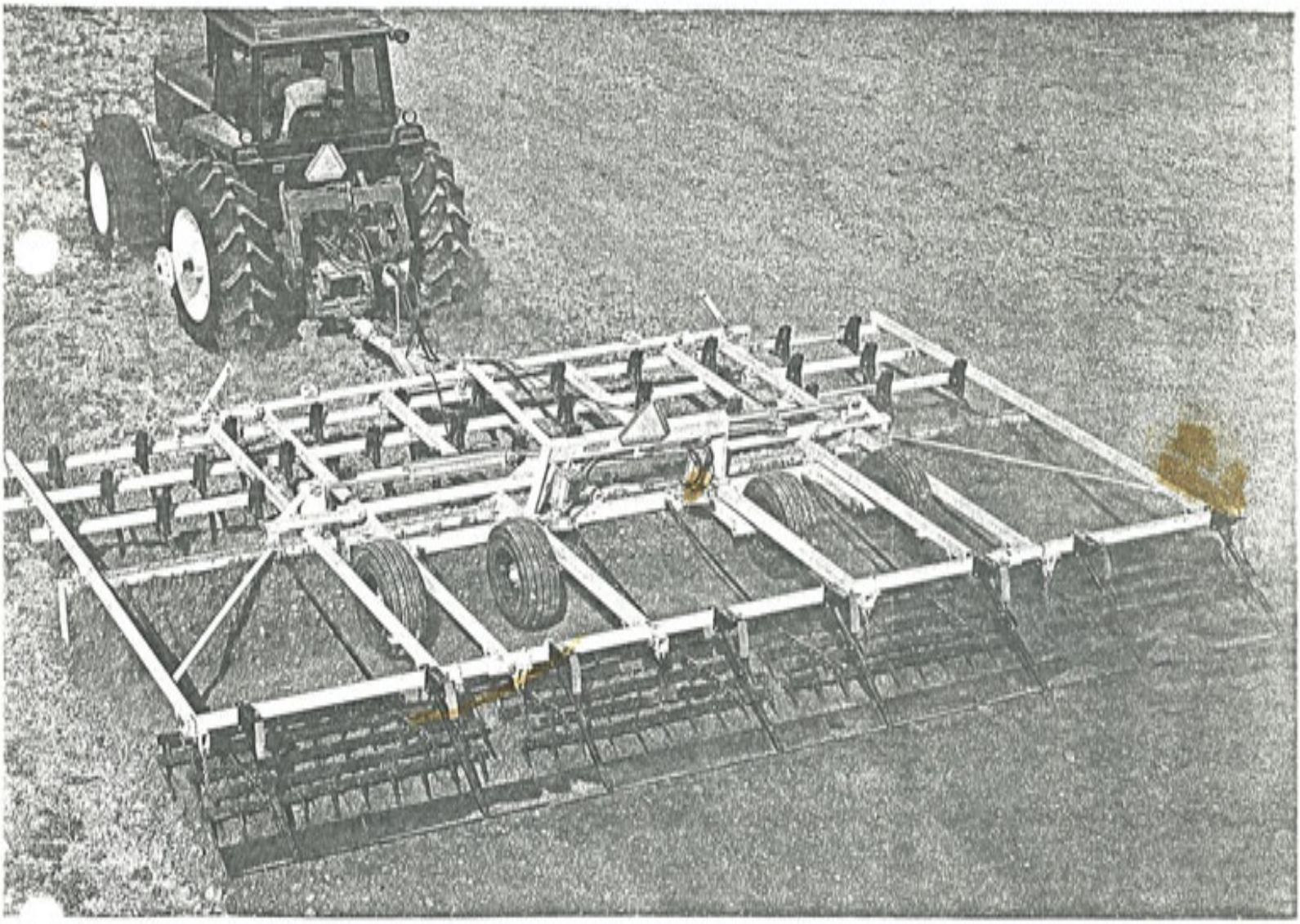

AMCO PRODUCTS, Portable Elevator Division, Dynamics Corp. of America
No. 1 AMCO Drive, Yazoo City, Mississippi 39194 (601)746-4464

ACCIDENT PREVENTION –

YOU CAN HELP

Accident Prevention depends on everyone, the designer, the manufacturer and the safety engineer. However, their combined efforts can be wiped out by a single careless act of the operator. Operators must accept a full measure of responsibility. Accidents can be prevented with the combined efforts of the engineers and the cooperation of the person who is directly responsible for the operation of the equipment. Machines can be hazardous in the hands of unfamiliar, untrained or unconcerned operators. We ask for your cooperation in the handling and operation of this equipment. Your safety is foremost. Make sure all operators of this equipment comply with all **DANGER, WARNING** and **CAUTION** instructions brought to their attention in this catalog. Remember **"SAFETY FIRST"!**

TO THE PURCHASER

The care you give your new AMCO Super-Till will greatly determine the satisfaction and service you will obtain from it. By observing the instructions and suggestions in this manual, your AMCO Super-Till will serve you well for many years.

As an Authorized AMCO Dealer, we stock Genuine AMCO Parts, which are manufactured with the same precision and skill as the original equipment. For best performance and longer life use only Genuine AMCO replacement parts. Our factory trained staff is kept fully informed of the most efficient methods of servicing AMCO equipment and is ready and able to assist you.

When you sell your Super-Till you should pass this manual to the new owner.

If you should require additional aid or information, contact us.

YOUR AUTHORIZED AMCO DEALER

OSHA requires that as a farm employer you meet certain safety requirements. Become familar with and comply with those requirements. Be sure anyone who operates this equipment understand all safety related items. If this Super-Till is repainted, be certain new decals are ordered. Decals pertaining to personal safety must be replaced.

Look for this symbol to point out important safety precautions. It means —ATTENTION! Become alert! Your safety is involved.

To insure efficient and prompt service, please provide the model number and serial number to your AMCO Super-Till in all correspondence or contacts. Remember, the right and left hand sides of the Super-Till are determined by standing at the rear of the Super-Till and facing the direction of travel.

MODEL NUMBER _____ **SERIAL NUMBER** _____

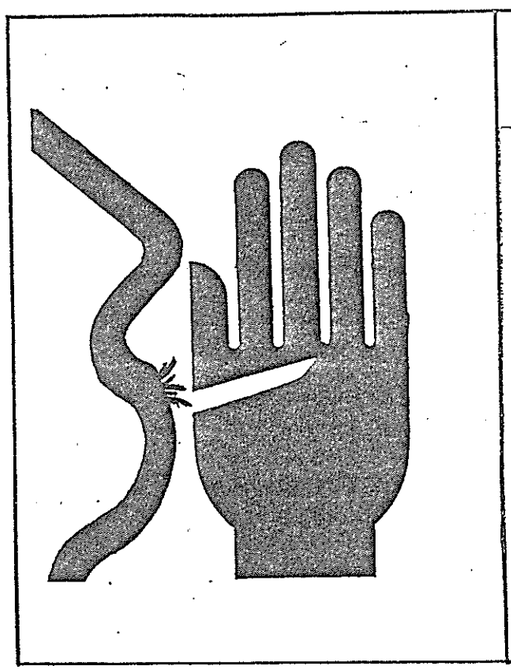

⚠ WARNING

HYDRAULIC SYSTEMS ARE HIGHLY PRESSURIZED. ESCAPING HYDRAULIC FLUID, EVEN AN INVISIBLE PIN HOLE LEAK, CAN PENETRATE BODY TISSUES CAUSING SERIOUS INJURY. USE A PEICE OF WOOD OR CARDBOARD WHEN LOOKING FOR LEAKS. NEVER USE THE HANDS OR OTHER PARTS OF THE BODY.

RELIEVE HYDRAULIC PRESSURE BEFORE DISCONNECTING CIRCUITS. WHEN REASSEMBLING, MAKE ABSOLUTELY CERTAIN THAT ALL CONNECTIONS ARE TIGHT. IF INJURED BY HYDRAULIC FLUID ESCAPING UNDER PRESSURE, SEE A DOCTOR IMMEDIATELY. SERIOUS INFECTION OR REACTION MAY OCCUR IF MEDICAL ATTENTION IS NOT GIVEN AT ONCE.

⚠ WARNING

ALWAYS SECURE FOR TRANSPORT BY USING THE ROCKSHAFT LOCK PINS AND WING LOCK PINS. FAILURE OF HYDRAULICS CAN CAUSE A SUDDEN OR DANGEROUS FALL.

⚠ WARNING

FAILURE TO FOLLOW RECOMMENDATIONS REGARDING TIRE SELECTION, INFLATION PROCEDURES, PRESSURES, AND TRANSPORT SPEEDS MAY RESULT IN SERIOUS OR FATAL INJURY DUE TO EXPLOSIVE TIRE AND WHEEL REACTION WHILE INFLATING OR BLOWOUTS IN TRANSPORT. READ AND COMPLY WITH TIRE MANUFACTURER'S SPECIFICATIONS, INSTRUCTIONS AND WARNINGS.

⚠ WARNING

DO NOT STEP ON TOP OF IMPLEMENT TIRE WHEN SERVICING OR ADJUSTING IMPLEMENT. TIRE CAN ROTATE UNEXPECTEDLY IF NOT FIRM AGAINST GROUND AND CAUSE A SERIOUS OR FATAL INJURY DUE TO A FALL ON THE IMPLEMENT.

⚠ WARNING

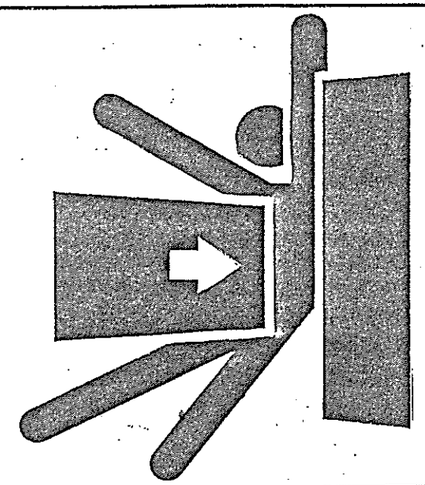

STANDING BETWEEN TRACTOR AND IMPLEMENT WHEN HITCHING COULD RESULT IN SERIOUS BODILY INJURY.

⚠ WARNING

WHEN TRAILING THE IMPLEMENT OVER PUBLIC ROADS, THE SMV EMBLEM MUST BE USED. AFTER DUSK, PROVIDE LIGHTING AND REFLECTORS ON THE IMPLEMENT IN ACCORDANCE WITH YOUR STATE LAW TO AVOID SERIOUS INJURIES.

⚠ WARNING

ALTHOUGH WINGS FOLD WELL PAST 90° INBOARD, UNLEVEL GROUND OR AN UNEXPECTED JAR CAN ALLOW WINGS TO FALL. FOLLOW ALL SAFETY PRECAUTIONS REGARDING FOLDED WINGS TO PREVENT SERIOUS OR FATAL ACCIDENTS

⚠ DANGER

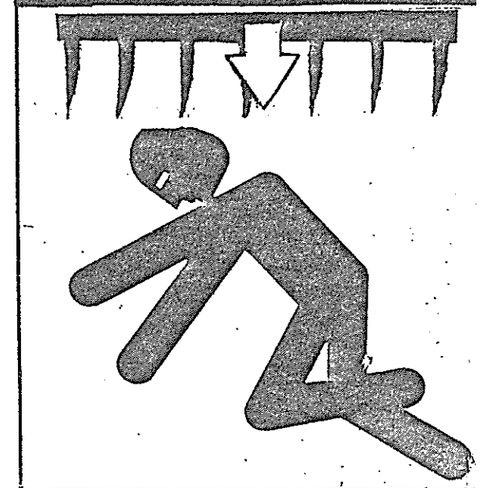

1. NEVER STAND UNDER WINGS OF IMPLEMENT. WINGS MAY FALL CAUSING A SERIOUS OR FATAL ACCIDENT DUE TO AIR IN THE HYDRAULIC SYSTEM, HYDRAULIC OR MECHANICAL FAILURE, OR ACCIDENTAL OPERATION OF HYDRAULIC CONTROLS.
2. WHEN FOLDED ALWAYS SECURE WINGS WITH WING LOCK PINS TO PREVENT FALLING.
3. ALWAYS MAKE SURE CYLINDERS AND HOSES ARE FULLY CHARGED WITH OIL AIR CAN ENTER SYSTEM THROUGH REPEATED COUPLING OR LEAKING CONNECTIONS. MAKE REPAIRS IMMEDIATELY. FREQUENTLY CHECK FOR MISSING OR DAMAGED PINS AT CYLINDER AND HINGE CONNECTIONS. REFER TO OWNER'S MANUAL FOR PROPER HYDRAULIC SYSTEM CHARGING AND OTHER INSTRUCTIONS. REPLACEMENT PARTS MUST MEET ORIGINAL SPECIFICATIONS TO PREVENT FAILURE.
4. FOR BEST SAFETY STORE IMPLEMENT WITH WINGS LOWERED. BE ALERT TO DANGERS FOR UNSUSPECTING CHILDREN OR OTHERS.

TABLE OF CONTENTS

To the Purchaser.....i

Safety.....1

Table of Contents.....5

General Torque Specifications.....6

Standard Specifications.....7

Assembly Instructions.....9

Check and Delivery Sheets.....24

Lubrication.....30

Storage.....31

Transporting.....31

Operating Instructions.....33

Operating Tips.....35

Maintenance.....36

~~Hydraulic Circuit.....41~~

~~Decal Placement Chart.....42~~

Frame Layout Figure.....43 39

Parts Lists.....49

ISSUED
2-27-86
6-30-87

⚠ CAUTION

WHEN TRANSPORTING MACHINERY OVER PUBLIC ROADS, COMPLY WITH YOUR LOCAL AND STATE LAWS REGARDING LENGTH, WIDTH AND LIGHTING.

⚠ CAUTION

PARK OR BLOCK THE IMPLEMENT SO IT WILL NOT ROLL WHEN DISCONNECTED FROM THE TRACTOR DRAWBAR.

⚠ CAUTION

USE PROPER IMPLEMENT SAFETY CHAIN DURING TRANSPORT TO PREVENT A SERIOUS ACCIDENT FROM LOSS OR FAILURE OF TRANSPORT PIN.

⚠ WARNING

ALL HYDRAULICALLY OR MECHANICALLY ELEVATED OPERATING COMPONENTS MUST BE LOWERED OR BLOCKED TO PREVENT ACCIDENTAL FALLING WHEN MAKING ADJUSTMENTS OR WHEN THE EQUIPMENT IS IDLE.

⚠ CAUTION

RAISED WINGS CAN CONTACT ELECTRIC UTILITY LINES AND OVERHEAD OBSTRUCTIONS WHILE IN TRANSPORT. MEASURE OVERALL TRANSPORT HEIGHT AND ASSURE CLEARANCE.

⚠ CAUTION

BE SURE ALL SCREWS ARE TIGHT, ALL COTTER PINS SPREAD AND ALL PINS PROPERLY INSERTED TO PREVENT ACCIDENTAL INJURY OR DEATH FROM EQUIPMENT FAILURE. REFER TO THE GENERAL TORQUE SPECIFICATION TABLE FOR SCREW TIGHTNESS.

SUPER-TILL (DO-ALLS)

MODEL - STO
Pull Type Pulverizer

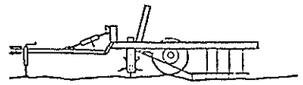

STANDARD SPECIFICATIONS

FRAME: Heavy duty tubular frame with center preassembly

TONGUE: 88" long preassembled to Main Frame with tongue jack and adjusting ratchet

WHEELS: 2(15 x 8 with 6 bolt hubs) STO-13',19' & 20'
4(15 x 8 with 6 bolt hubs) STO-26'

REELS: 5 blade spiral reels and frames preassembled with 1 15/16 round solid shaft with triple lip regreasable bearings (cartridge-type)

STO DRAWBAR HORSEPOWER: 3-5 drawbar horsepower/foot

SPIKE TOOTH: Extra heavy 5 bar flexible, replaceable, adjustable teeth are 10" x 3/4", set on 1 1/2" spacing (13'-100 teeth; 19' & 20'-160 teeth; 26'-210 teeth)

CYLINDERS: 1(4x8 w/stroke control)For trans
2(3x24) For folding wings

HOSES: 1/4" and 3/8" hoses and fittings between cylinders

Model Number	Working Width	Transport Width	Transport Height	Number Wheels	Number Reels	Number Harrows	Appx. Weight
STO-013	13'	14'0"	--	2	2	2	2637
STO-019	19'	20'8"	--	2	3	3	3585
STO-020	20'	10'0"	11'6"	2	3	3	3900
STO-026	26'	14'11"	11'5"	4	4	4	5113

MODEL - ST2
2-Bar Pull Type Pulverizer

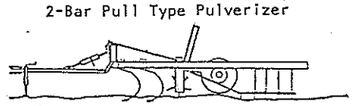

MODEL - ST3
3-Bar Pull Type Pulverizer

STANDARD SPECIFICATIONS

FRAME: Heavy duty tubular frame with center preassembly

TONGUE: 88" long preassembled to Main Frame with tongue jack, adjusting ratchet and self leveling rod

WHEELS: 2(15 x 8 with 6 bolt hubs) ST2 & ST3 - 13'
4(15 x 8 with 6 bolt hubs) ST2 & ST3 - 26'
2(15 x10 with 6 bolt hubs) ST2 & ST3 - 19'&20'

REELS: 5 blade spiral reels and frames preassembled with 1 15/16 round solid shaft with triple lip regreasable bearings (cartridge-type)

SPIKE TOOTH: Extra heavy 5 bar flexible, replaceable, adjustable teeth are 10" x 3/4", set on 1 1/2" spacing (13'-100 teeth; 19' & 20'-160 teeth; 26'-210 teeth)

ST2 & ST3 DRAWBAR HORSEPOWER: 4-6 drawbar horsepower/foot

CYLINDERS: 1(4x8 with stroke control) for transporting ST2 & ST3-13'
2(3x8 with stroke control) for transporting ST2 & ST3- 19', 20' & 26'
2(3x24) for folding wings

HOSES: 1/4" and 3/8" hoses and fittings between cylinders

SHANKS: Shank Mounting Tubes 3x3x3/16 W.T.
1/2 x 1 3/4 Live Leaf Shanks w/10" Sweeps (OPTION A)
7/16 x 1 1/4 Danish Shanks w/4" Sweeps (OPTION B)

Model Number	Working Width	Transport Width	Transport Height	Number Wheels	No. Reels	Number Harrows	Shank Option A No. Teeth	Shank Option A Appx. WT.	Shank Option B No. Teeth	Shank Option B Appx. WT.
ST2-013	13'	14'1"	--	2	2	2	15	3506	23	3299
ST2-019	19'	20'8"	--	2	3	3	25	4978	35	4763
ST2-020	20'	10'0"	11'6"	2	3	3	25	5317	35	5102
ST2-026	26'	14'11"	11'5"	4	4	4	33	6921	47	6646
ST3-013	13'	14'1"	--	2	2	2	15	3591	23	3484
ST3-019	19'	20'8"	--	2	3	3	25	5305	35	5090
ST3-020	20'	10'0"	11'6"	2	3	3	25	5582	35	5367
ST3-026	26'	14'11"	11'5"	4	4	4	33	7271	47	6996

AMCO Effective 2-27-86

F.O.B. Yazoo City, Mississippi

SPECIFICATIONS AND PRICES SUBJECT TO CHANGE WITHOUT NOTICE

AMCO PRODUCTS
No. 1 AMCO Drive, Yazoo City, Mississippi 39194 / 601/746-4464
Portable Elevator Division, Dynamics Corporation of America

GENERAL TORQUE SPECIFICATION TABLE (TABLE 1)

USE THE FOLLOWING TORQUES WHEN SPECIAL TORQUES ARE NOT GIVEN

Note: These values apply to fasteners as received from supplier, dry, or when lubricated with normal engine oil. They do not apply if special graphited or moly-disulphide greases or other extreme pressure lubricants are used. This applies to both NF and NC threads.

SAE Grade No		2		5		8 *	
Bolt head identification marks as per grade NOTE: Manufacturing Marks Will Vary							
Bolt Size		Torque Foot Pounds		Torque Foot Pounds		Torque Foot Pounds	
Inches	Millimeters	Min	Max	Min	Max	Min	Max
1/4	6.35	5	6	9	11	12	15
5/16	7.94	10	12	17	20.5	24	29
3/8	9.53	20	23	35	42	45	54
7/16	11.11	30	35	54	64	70	84
1/2	12.70	45	52	80	96	110	132
9/16	14.29	65	75	110	132	160	192
5/8	15.88	95	105	150	180	220	264
3/4	19.05	150	185	270	324	380	456
7/8	22.23	160	200	400	480	600	720
1	25.40	250	300	580	696	900	1080
1-1/8	25.58			800	880	1280	1440
1-1/4	31.75			1120	1240	1820	2000
1-3/8	34.93			1460	1680	2380	2720
1-1/2	38.10			1940	2200	3160	3560

* Thick nuts must be used with Grade 8 bolts

ALL BOLTS SHOULD BE TIGHTENED TO THE RECOMMENDED TORQUES SHOWN IN THE *"GENERAL TORQUE SPECIFICATION TABLE"*

assembly instructions

The AMCO Super-Till is shipped from the factory with maximum pre-assembly in bundles. Each bundle has attached to it a metal bundle number tag. Use the following procedure to identify the bundles needed for a specific model:

1. Determine complete model number of unit to be assembled.
2. Find model number listed on check and delivery sheets on pages 24 - 29 in this manual.
3. Identify bundles by description, bundle number and quantity as shown on the check and delivery sheets for the model.

STEP 1.
Select a clear, level assembly area. Place all parts and bundles where they will be readily accessible during assembly.

NOTE: The right and left sides of the unit are determined by standing at the rear of the unit and facing the direction of travel.

NOTE: To insure proper alignment, leave nuts loose until all screws for a component have been inserted, then tighten nuts evenly to prevent distortion and binding. See General Torque Specification Table on page 6.

CAUTION

Be sure all screws are tight, all cotter pins spread and all pins properly inserted to prevent accidental injury or death from equipment failure. Refer to the General Torque Specification Table on page 6 for screw tightness.

STEP 2
Remove strapped-on parts from the center section main frame, and place the main frame on sturdy stands at least 25" high.

STEP 3
Attach the large butt cylinder mount to the two main frame rails with the eight 5/8 x 6 hexscrews, eight locknuts and two clamp plates provided. Be sure to position the cylinder mount against the front side of stops on top of the main frame rails and with the mount slanting rearward (Figure 1).

Figure 1. Butt cylinder mount.

SUPER-TILL (DO-ALLS)

FINISHING ATTACHMENTS

DRAG PIPE: 2" standard pipe. Pivots on 2 replaceable steel bushings. Floating pipe for use in light sandy loam soil.

DRAG BOARD - METAL: 2 springs that provide a downward force, with 3 height settings. 3/16" steel Z-formed reversible drag board.

DOUBLE ROLLING BASKET: Ideal seedbed finishings and chemical incorporation. Baskets are replaceable 5/16" oil tempered spring wire. Self-aligning, relubricable and triple-lip sealed bearings. Fully adjustable parallel carrier arms with baskets pre-assembled from factory.

DRAWBAR HORSEPOWER: Dragboard - 1/2 to 1 drawbar horsepower/foot

Double Rolling Baskets - 2 to 3 drawbar horsepower/foot

Width of Unit	Drag Pipe		Drag Board		Double Rolling Baskets	
	Order No.	Wt.	Order No.	Wt.	Order No.	Wt.
13'	DE-14-0001	57	DE-14-0004	224	DE-14-0007	661
19'&20'	DE-14-0002	90	DE-14-0005	343	DE-14-0008	992
26'	DE-14-0003	118	DE-14-0006	455	DE-14-0009	1322

OPTIONAL EQUIPMENT

Order No.	Description	Approx. Wt.
AG-20-0017	Hose Kit to tractor (ST0-013&019).....	6.61
AG-20-0022	Hose Kit to tractor (ST0-020&026).....	9.49
AG-20-0018	Hose Kit to tractor (ST2-013).....	8.95
AG-20-0020	Hose Kit to tractor (ST2-019).....	8.86
AG-20-0023	Hose Kit to tractor (ST2-020&026).....	12.84
AG-20-0019	Hose Kit to tractor (ST3-013).....	10.10
AG-20-0021	Hose Kit to tractor (ST3-019).....	9.78
AG-20-0024	Hose Kit to tractor (ST3-020&026).....	14.18
FA-01-0021	Safety Chain 5/16" (All Super-Till Units)....	7.50
DE-01-0097	Wing Lock Bolts (ST0,2&3-020&026).....	4.16
AN-20-0001	Wheel 15x10-6 hole (in lieu of 15x8-6 hole)..	Add 6.00 ea.
DE-01-0100	Mechanical Wing Gauge Wheel, 20.5 x 8.00 Tire and 10" Wheel included. Two (2) required....	86 ea.
	Dual Wheels with special rockshaft for ST2 & ST3 - 019 & 020 with 4 - 15x8 wheels & 6 bolt hubs in lieu of standard single wheels.....	Add 132

TIRES RECOMMENDED:
ST0 (ALL), ST2 (13' & 26'), ST3 (13' & 26') & Optional Duals - 11L x 15, 6 or 8 ply
ST2, ST3 (19' & 20') - 12.5L x 15, 8 ply

AMCO Effective ~~2-27-86~~ 6-30-86 F.O.B. Yazoo City, Mississippi

SPECIFICATIONS AND PRICES SUBJECT TO CHANGE WITHOUT NOTICE

AMCO PRODUCTS
No. 1 AMCO Drive, Yazoo City, Mississippi 39194 / 601/746-4464
Portable Elevator Division, Dynamics Corporation of America

Need to show Out Rock Stand for Dbl. Roll's Bskts when used on STO models

STEP 4

Attach all center section cross frame members, including inside front hinge, front frame member, reel and frame, inside hinge, inside rear hinge and cross tubes as appropriate for the particular model. For 26' models only refer to the following paragraph before proceeding with step 4. See Figures 2 through 5 below for member location and refer to the appropriate frame layout figure on pages 43 - __ to properly locate 3 x 3 cross tubes. Use 5/8 x 5-1/2 hex screws and 1/2 x 2 x 5-1/2 clamp plates to join front hinge and cross tube to frame rails on ST2 and ST3 models. Use 5/8" u-bolts to connect cross tubes at other locations. Use 3/4" and 7/8" u-bolts to attach inside hinge (for rigid ST0 models attach front frame member instead) and reel and frame to frame rails. Do not tighten nuts at this time.

For 26' models first attach the reel and frame, then place the two frame rails (with rockshaft mounting journals) on top of the reel frame. See the appropriate frame layout figure (pages 39 - 47) for the proper direction to turn frame rail fastening plates. Locate the rails against the outside of stops on the reel frame. Support each rail at the heavy end. Now attach remaining cross members to the main frame as described in step 4 above.

IMPORTANT: For wing models the center section reel and frame must have 1 1/4" spacer bolts at each end (Figure 6).

IMPORTANT: Locate reel and frame so that reel blades are underneath angle iron spider legs when rotated to the front side (Figure 7).

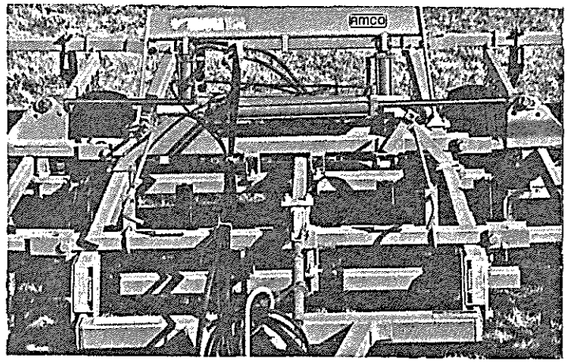

(SIMILAR TO INSIDE HINGE, FIG. 2, BUT LONGER.)

Figure 2. ST2 or ST3 20' front and and inside hinges. Note: ST2 or ST3 13' or 19' same.

Figure 3. ST2 or ST3 26' front and inside hinge. ST0 26' inside hinge is the same.

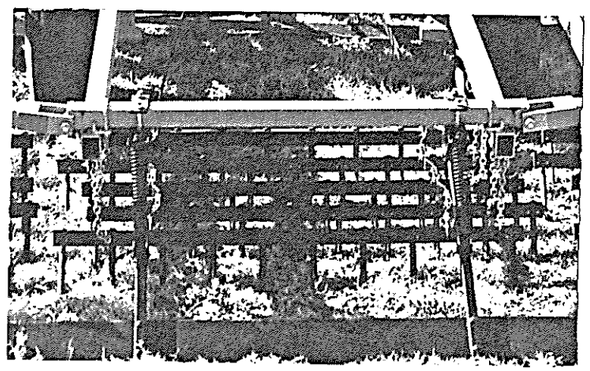

(SAME INSIDE HINGE, FIG. 2)

Figure 4. ST0, ST2 or ST3 rear hinges.

Figure 5. ST0 20' inside hinge.

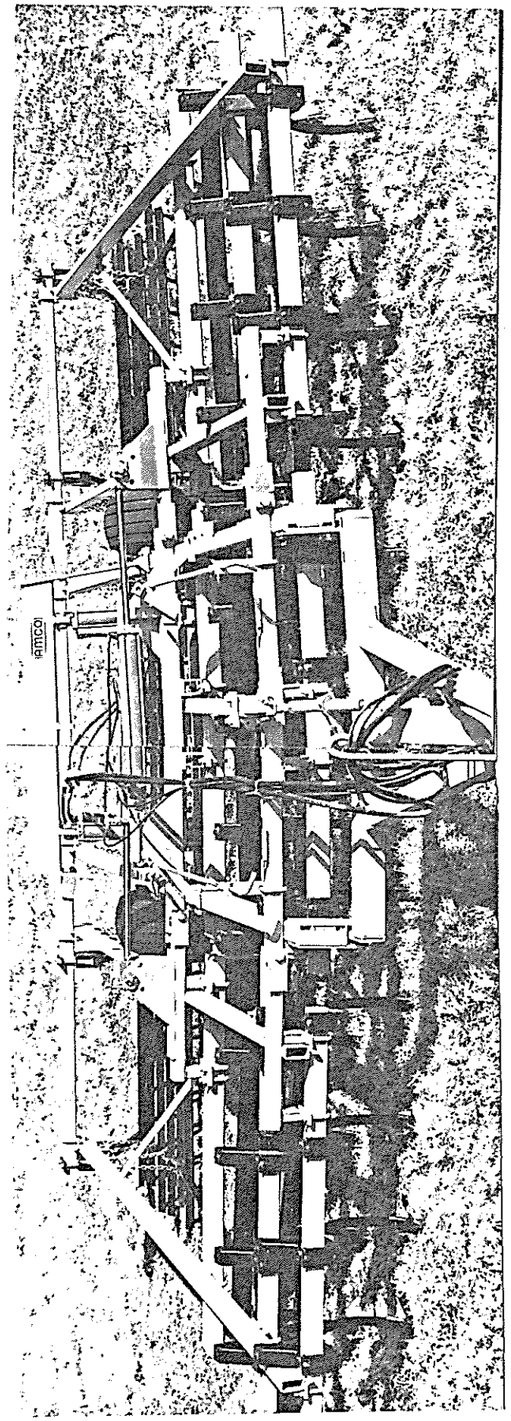

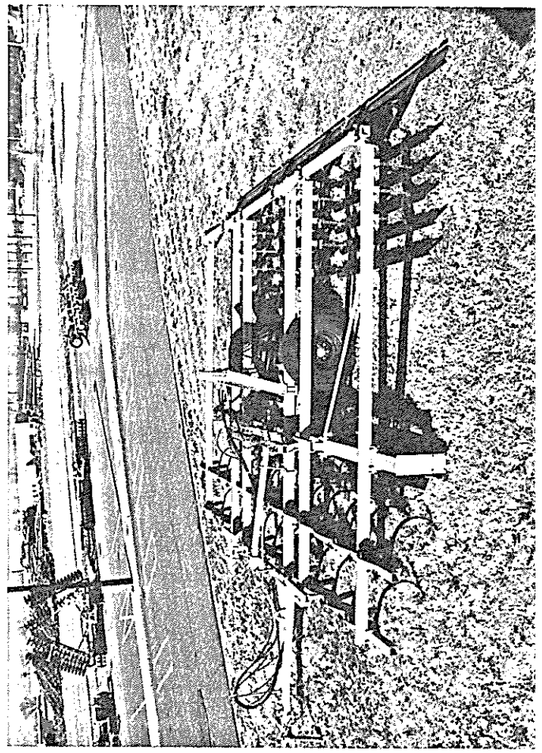

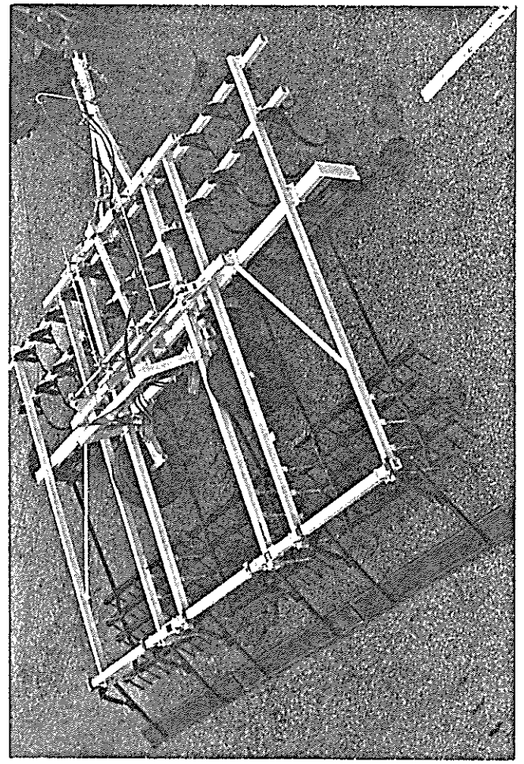

STEP 6
See Table 1 for wheel size and recommended tire size and inflation pressure for safe transport and good field performance for each model. Mount tires on wheels and inflate. Mount wheels on hubs and tighten all hub bolts.

⚠WARNING

FAILURE TO FOLLOW RECOMMENDATIONS REGARDING TIRE SELECTION, INFLATION PROCEDURES, PRESSURES, AND TRANSPORT SPEEDS MAY RESULT IN SERIOUS OR FATAL INJURY DUE TO EXPLOSIVE TIRE AND WHEEL REACTION WHILE INFLATING OR BLOWOUTS IN TRANSPORT. READ AND COMPLY WITH TIRE MANUFACTURER'S SPECIFICATIONS, INSTRUCTIONS AND WARNINGS.

STEP 7
For 13′ and 19′ models attach remaining frame rails using 5/8" and 7/8" u-bolts. Outside rails are reinforced with 1/4" plate at the reel frame mounts and are equipped with a lug for mounting tie straps. Be sure to locate rails against the unwelded side of stops on the reel frame. For 19′ models attach tie straps between the outer two rails with 7/8"x 2 " hex screws. The frame layout figure shows the proper direction to turn frame rail fastening plates and shows the general location of frame parts. Make sure that the frame is square and tighten all connections.

TABLE 1.
Wheel and Tire Information

Model	Number Wheels	Wheel Size	Recommended Tire	Inflation Pressure
ST0 13′, 19′, 20′	2	15x8, 6-bolt	11Lx15 6, 8 ply	24 psi
ST0 26′	4	15x8, 6-bolt	11Lx15 6, 8 ply	24 psi
ST2, ST3 13′	2	15x8, 6-bolt	11Lx15 6, 8 ply	24 psi
ST2, ST3 19′, 20′	2	15x10, 6-bolt	12.5Lx15, 8 ply	32 psi
ST2, ST3 20′ w/duals	4	15x8, 6-bolt	11Lx15 6, 8 ply	24 psi
ST2, ST3 26′	4	15x8, 6-bolt	11Lx15 6, 8 ply	24 psi

STEP 8
For ST0 models locate the mount for the tongue ratchet jack on the inside hinge (Figures 10 and 5). Center the mount 3" to the left of the hinge center and attach with two 5/8" u-bolts. Now attach the tongue ratchet jack.

For ST2 and ST3 models attach the self-leveling rod to the rockshaft using a 1" x 3 3/8" pin and roll pins and attach to the front hinge using two 3/4" locknuts and top plate (Figures 11 and 2). Attach tongue ratchet jack.

IMPORTANT: For ST3 models shims on the under side of the top plate must be turned to the rear to prevent excessive wear on the self-leveling bar.

To complete assembly of 13′ and 19′ models, skip to STEP 10.

STEP 9
For wing models place wing frame rails on sturdy stands spaced as shown in the frame layout figure. Loosely attach the wing reel and frames, wing hinges,

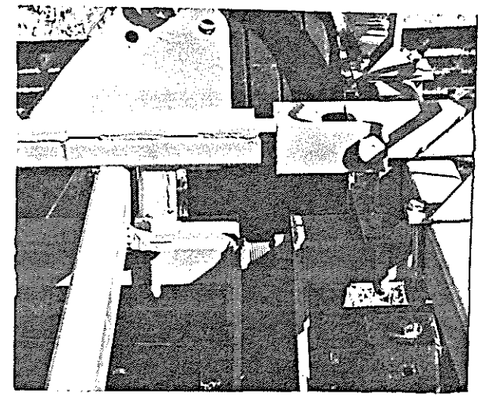

Figure 6. Spacer bolts on reel and frame.

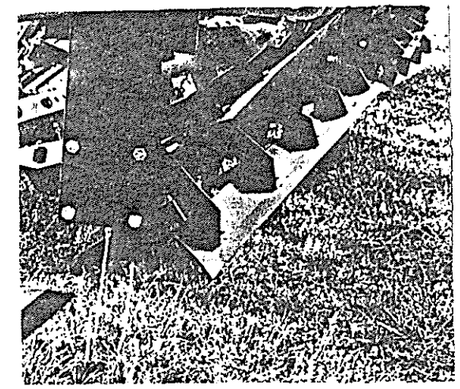

Figure 7. Proper blade direction for front side of reel and frame.

STEP 5
For 26′ models only attach the center section rockshaft, locating the head of the 1-1/2" x 6 3/4" pivot pins against the non-rotation stops on the rockshaft. Be careful not to drive the bronze bushings together, closing the grease groove in the pivot journal. Camber in spindles and hubs is downward.

For all ST0 models and ST2 or ST3 13′ models center one rockshaft cylinder mount at a point 1-1/2 inches to the right of the center of the rockshaft and attach with two 7/8 u-bolts (Figure 8).

For ST2 or ST3 19′, 20′ or 26′ models locate a rockshaft cylinder mount against the inside wheel legs (Figure 9).

NOTE: Face the mount rearward with the hole on the upper side. Before tightening make sure it is directly in line with the cylinder butt mount(s) above.

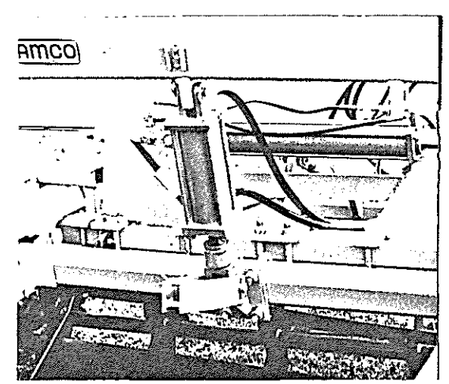

Figure 8. Rockshaft cylinder mount for ST2 or ST3 13′ and all ST0 models.

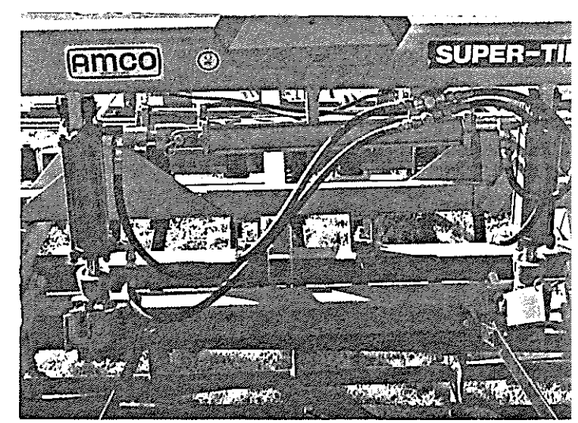

Figure 9. Rockshaft cylinder mounts for ST2 or ST3 19′, 20′ or 26′ models.

STEP 11

For wing models connect the adjustable cylinder mounts for the 3" x 24" wing folding cylinders using two 1-1/4" hex nuts (Figures 13 and 14). Attach the right hand mount on the rear stand on the inside hinge. Attach the left hand mount to the front stand. Set as shown in Figure 15 and tighten nuts.

Connect the butt ends only of the two 3" x 24" hydraulic cylinders with ports upward (Figures 13 or 14). Tighten the plug on the side of the butt casting on each cylinder. DO NOT INSTALL ROD END OF THE CYLINDER AT THIS TIME. Carefully block rod end of cylinder so that the rod can be freely extended.

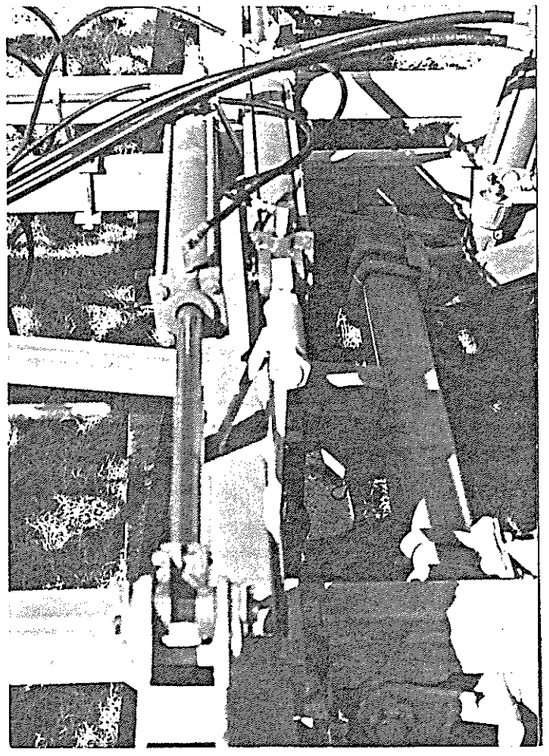

Figure 13. Wing cylinders, 20' models.

— SIMILAR TO FIG. 13, BUT CYLINDERS MOUNT FURTHER APART ON THE MAINFRAME —

Figure 14. Wing cylinders, 26' models.

Figure 15. Adjustable cylinder mount.

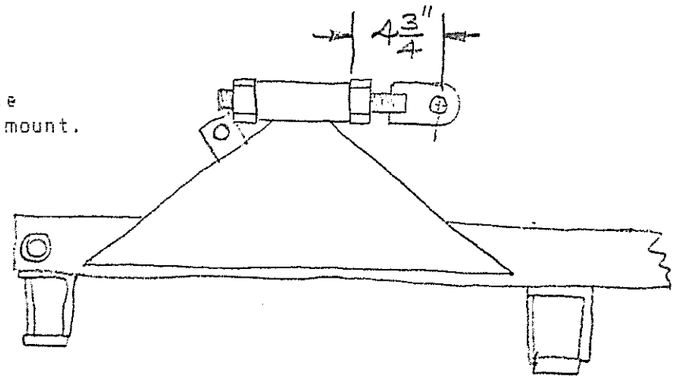

cross tubes and wing tie straps. The end of the reel frame with a wing lock down hole should be placed toward the center section. Harrow

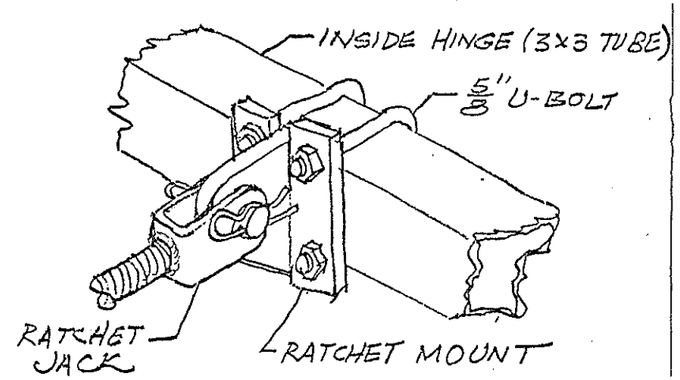

Figure 10. ST0 ratchet and mount.

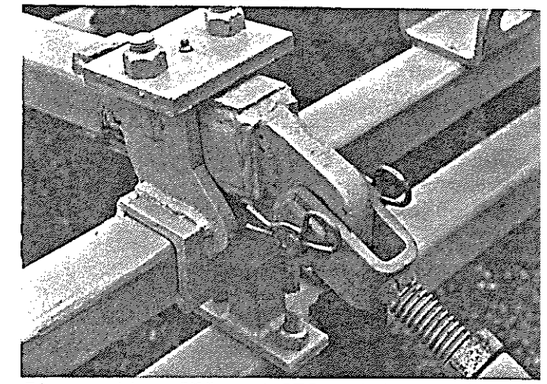

Figure 11. ST2 and ST3 ratchet and self-leveling rod.

mounting lugs should face rearward. Be sure frame rails seat against stops on the reel frame and rear hinge. Wing cylinder mounting hinges on ST2 and ST3 models have 2-9/16" slots. Wing cylinder mounting hinges on ST0 models have 1-9/16" slots (Figure 12). All connections to the reel and frame require a 7/8" u-bolt. Use a 7/8" x 2" hex screw at the outside tie strap connection. The ends of cross tubes should be located as shown on the frame layout figure for shank models or shanks may not fit properly when attached. Connect wing and center section hinges using 1" x 6½" hex screws at the reel and frames and 1" x 5½" hex screws at the other connections. Make sure that the frame is square and tighten all connections. Adjust wing spacer bolts (Figure 6) so that wings will be level when the unit is later raised on the wheels. Tighten jam nut on each spacer bolt.

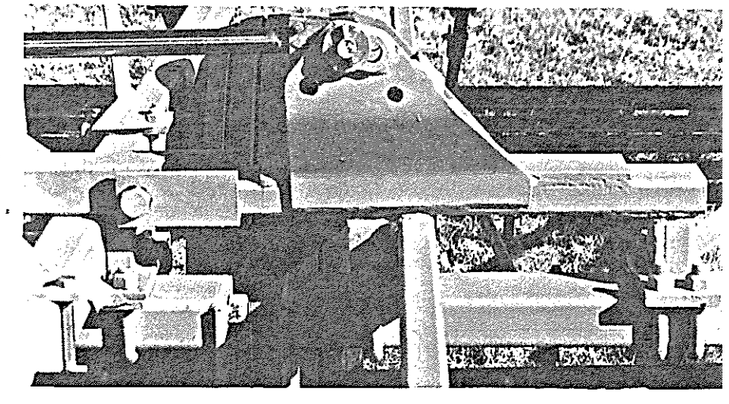

Figure 12. Wing inside hinge, LH (ST2 shown).

STEP 10

For all ST0 models and 13' ST2 and ST3 models install one 4 x 8 hydraulic cylinder with stroke control and transport lock on the butt cylinder mount and rockshaft (Figure 8). Face the ports to the front and connect the rod end to the rockshaft. Install the two 1" flat washers between the transport lock and the cylinder clevis.

For 19', 20' and 26' ST2 and ST3 models install two 3 x 8 hydraulic cylinders with stroke control and transport lock on butt cylinder mount and rockshaft (Figure 9). Face the ports to the rear. The rod ends should be connected to the rockshaft. Install the two 1" flat washers with each cylinder between the transport lock and the cylinder clevis.

HYDRAULIC KITS

REF. NO.	PART NO.	DESCRIPTION	NO. REQ'D ST10-13	ST10-19	ST10-20	ST10-26	ST12-13	ST12-19	ST12-20	ST12-26	ST13-13	ST13-19	ST13-20	ST13-26
1	P6831	Hydraulic Cylinder 3 x 24			2	2			2	2			2	2
2	USA65190	Hydraulic Cylinder 3 x 8						2	2	2		2	2	2
3	USA58921	Hydraulic Cylinder 4 x 8	1	1	1	1	1	1			1			
4	P6813	Hydraulic Hose 3/8" x 36"			1			2	3	2		2	3	2
5	P6814	Hydraulic Hose 3/8" x 48"			1			2	3	2		2	3	2
6	P6815	Hydraulic Hose 3/8" x 60"				1				1				1
7	P6820	Hydraulic Hose 3/8" x 120"			1	1			1	1			1	1
8	P6801-1	Elbow 90°-9/16-18 37°M 3/4-16 O Ring M ZP			2	2			2	2			2	2
9	P6803-1	Tube Tee 9/16-18 37°M, 1/2 NPT M ZP						2	2	2		2	2	2
10	P6806-1	Straight Adapter Union 9/16-18 37°M-1/2NPT M ZP						4	4	4		4	4	4
11	P6808-1	Tee Adjustable (2)9/16-18 37°M, (1)3/4-16 O Ring M ZP			2	2			2	2			2	2
12	P6810-1	Restrictor Coupling, 9/16-18 37°F ZP 9/16-18 37°M			1	1			1	1			1	1

3 x 8 LIFT CYLINDERS (ST2 and ST3 - 19', 20', 26')

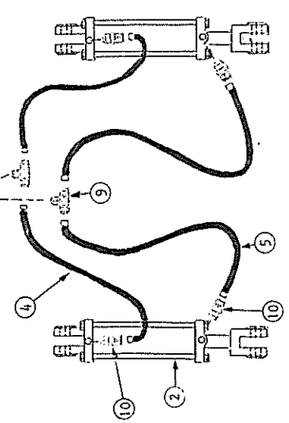

3 x 24 WING FOLD CYLINDERS (ST0, ST2, ST3 - 20')

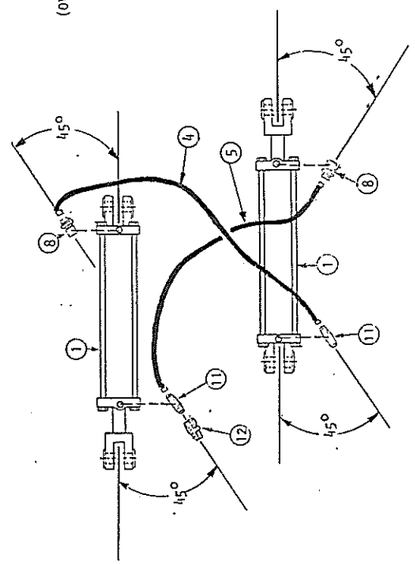

3 x 24 WING FOLD CYLINDERS (ST0, ST2, ST3 - 26')

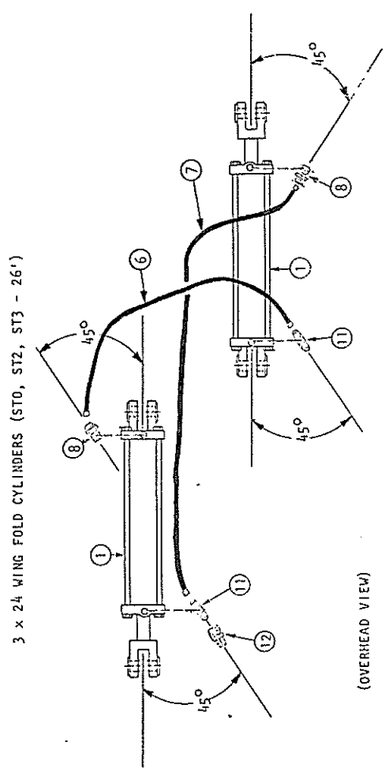

STEP 12

Install hydraulic fittings and hoses on the unit observing safe practices (see warnings in this manual) and following the instructions below:

1. ~~Use small amount of~~ Only use ½" NPT pipe sealant on fittings. ~~to prevent fluid leaks, but avoid contaminating hydraulic system.~~ Do not use pipe sealant on ¾" NPT O Ring fittings and 9/16-18, 37° flare fittings. Make sure all connections are tight.

2. For proper location of hoses and fittings refer to the appropriate hydraulic circuit diagram and parts list on page 17.

3. Turn fittings as shown on the proper hydraulic circuit diagram (especially on the 3" x 24" cylinders).

IMPORTANT: Tees and ells used on 3" x 24" cylinder ports must be turned as shown on the hydraulic circuit diagram in this manual to prevent damage to these fittings from cylinder movement when wings are folded.

4. Make sure hoses are routed so as to prevent binding or kinking during field use or transport.

5. On models that use two 3 x 8 lift cylinders, two tees connect the hoses running from ports on these cylinders. Insert the body end of each tee through the rear of the mounting bracket on the butt cylinder mount. Hoses to the tractor (optional equipment) should be connected to each tee from the front side of the bracket to hold the hoses in place.

6. Attach the hose holder to the pull tongue using a 1/4" x 2" cotter pin and connect and route hoses for the tractor, using hoses ties to fasten hoses to the main frame and away from moving parts.

7. Double check hose routing then properly charge hydraulic system as described in STEPS 13 and 14 below before using cylinders for any function.

STEP 13

Attach hoses to a tractor and charge 8" stroke lift cylinders by raising and lowering the unit at least five times, making sure to fully extend and retract the cylinders during each cycle. Do not get underneath any part of the unit until cylinders are fully charged. Always check tractor fluid level after charging cylinders, since hoses and cylinders on some models can hold up to 3 gallons of hydraulic fluid.

STEP 14

For wing models make sure that the 3" x 24" cylinder is sturdily blocked so that the rod can be freely extended to full stroke. Charge the cylinders with oil by applying hydraulic pressure and extending and retracting the rods fully at least five extensions. Proper charging of cylinders will purge air from the system. Air can cause injury or death due to falling

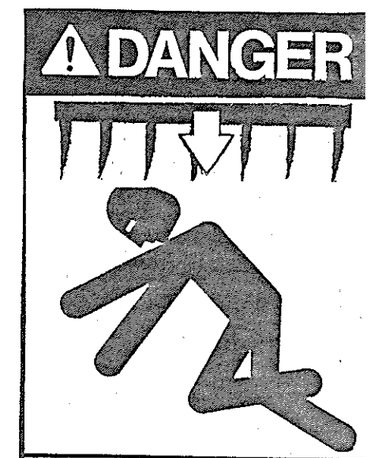

1. NEVER STAND UNDER WINGS OF IMPLEMENT. WINGS MAY FALL CAUSING A SERIOUS OR FATAL ACCIDENT DUE TO AIR IN THE HYDRAULIC SYSTEM, HYDRAULIC OR MECHANICAL FAILURE, OR ACCIDENTAL OPERATION OF HYDRAULIC CONTROLS.
2. WHEN FOLDED ALWAYS SECURE WINGS WITH WING LOCK PINS TO PREVENT FALLING.
3. ALWAYS MAKE SURE CYLINDERS AND HOSES ARE FULLY CHARGED WITH OIL AIR CAN ENTER SYSTEM THROUGH REPEATED COUPLING OR LEAKING CONNECTIONS. MAKE REPAIRS IMMEDIATELY. FREQUENTLY CHECK FOR MISSING OR DAMAGED PINS AT CYLINDER AND HINGE CONNECTIONS. REFER TO OWNER'S MANUAL FOR PROPER HYDRAULIC SYSTEM CHARGING AND OTHER INSTRUCTIONS. REPLACEMENT PARTS MUST MEET ORIGINAL SPECIFICATIONS TO PREVENT FAILURE.
4. FOR BEST SAFETY STORE IMPLEMENT WITH WINGS LOWERED. BE ALERT TO DANGERS FOR UNSUSPECTING CHILDREN OR OTHERS.

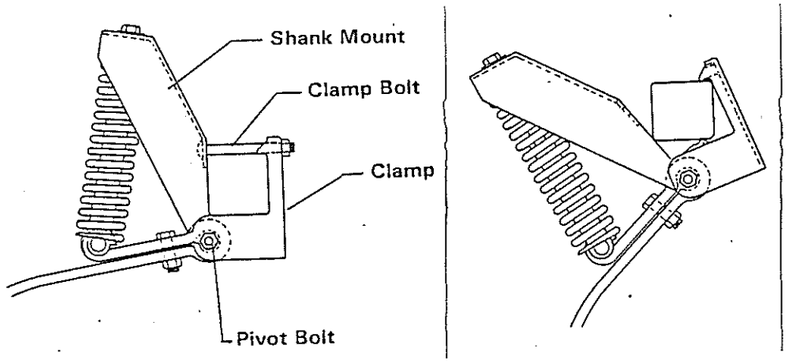

Figure 16. Live Leaf shank.

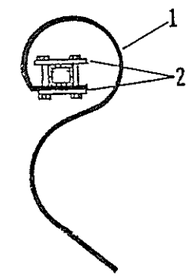

Figure 17. Danish shank

STEP 17
Arrange spike tooth harrows underneath the frame roughly as shown in the frame layout figure. Note positions of 50-tooth versus 55-tooth harrows. Connect two 1/4" x 1-1/2", 17" long adjusting links at each tow mount on the rockshaft and reel frame with a 1/2" x 1¼" hex screw. Connect the end of the links with the single hole to the mounts (Figures 1 and 12). Connect two 40½" tow links for each harrow behind the rockshaft and two 51½" tow links for the remaining harrows. Be sure to connect the beveled end of each tow link to the harrow with the beveled side down. Note: On 19' and 20' models the two inside tow links should pull on somewhat of a degree, rather than straight forward (Figure 4).

STEP 18
Locate all spike tooth harrows so that end spikes on bars are centered 7-1/2" apart. Connect the end link of lift chains to the four adjusting mounts underneath each frame rail, using 3/8" x 1¼" hex screws. Lift chains are provided for the four rear spike tooth bars. Remove and discard the 3/8" nut (spike attachment nut) on each bar that lies most nearly underneath the frame rail chain mount for that bar. Place the bottom chain link over the threaded portion of the u-bolt and connect with the 3/8" flange lock nut provided for each chain (Figure 18, 19 and 20). Flange lock nuts prevent the chain link from spreading, causing premature loosening during field use.

STEP 19
Refer to frame layout figure for proper location of optional rear finishing attachments.

Layout metal drag boards roughly two feet behind spike tooth harrows as described on frame layout figure. Allow 1" space between ends of boards and be sure they are centered on the unit. Assemble spring loaded carrier arms and mounts, setting the spring rod in the center hole position (Figure 19). Attach two carrier arms to each board, using the holes that best allow the mounts to clear frame rails (Figure 20). Attach mounts to carrier arms using

wings, and enters the system when assembling or disassembling hydraulic connections, after repeatedly disconnecting from the tractor or whenever leaks occur. Cylinders should be recharged after any of these occurences to insure safe and dependable operation.

Now attach the rod end of the 3" x 24" cylinders to the mounts on the wings, using 1" x 5⅞" pins and roll pins. For each wing install two 1" flat washers between the outside of the mounts and the roll pins.

STEP 15
At this time the unit may be locked into transport position with the mechanical transport locks at the lift cylinders or again lowered on the stands in order to complete assembly.

⚠WARNING

ALL HYDRAULICALLY OR MECHANICALLY ELEVATED OPERATING COMPONENTS MUST BE LOWERED OR BLOCKED TO PREVENT ACCIDENTAL FALLING WHEN MAKING ADJUSTMENTS OR WHEN THE EQUIPMENT IS IDLE.

⚠WARNING

ALWAYS SECURE FOR TRANSPORT BY USING THE ROCKSHAFT LOCKS. FAILURE OF HYDRAULICS CAN CAUSE A SUDDEN OR DANGEROUS FALL.

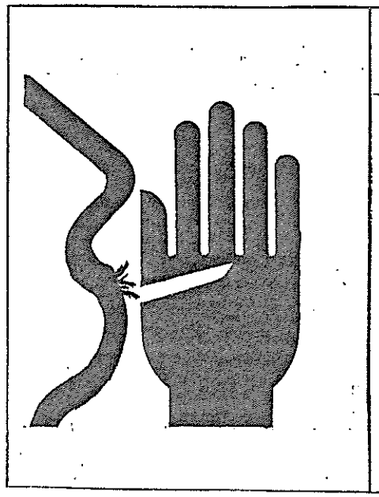

⚠WARNING

HYDRAULIC SYSTEMS ARE HIGHLY PRESSURIZED. ESCAPING HYDRAULIC FLUID, EVEN AN INVISIBLE PIN HOLE LEAK, CAN PENETRATE BODY TISSUES CAUSING SERIOUS INJURY. USE A PEICE OF WOOD OR CARDBOARD WHEN LOOKING FOR LEAKS. NEVER USE THE HANDS OR OTHER PARTS OF THE BODY.

RELIEVE HYDRAULIC PRESSURE BEFORE DISCONNECTING CIRCUITS. WHEN REASSEMBLING, MAKE ABSOLUTELY CERTAIN THAT ALL CONNECTIONS ARE TIGHT. IF INJURED BY HYDRAULIC FLUID ESCAPING UNDER PRESSURE, SEE A DOCTOR IMMEDIATELY. SERIOUS INFECTION OR REACTION MAY OCCUR IF MEDICAL ATTENTION IS NOT GIVEN AT ONCE.

STEP 16
For ST2 and ST3 models refer to the appropriate frame layout figure for proper shank locations.

To install Live Leaf shanks first remove the clamp bolt nut and loosen the pivot bolt (Figure 16). Slide the clamp bolt back against the spring. Open the clamp by pulling top forward. Bring assembly up under the frame from bottom and roll lower portion of shank forward until the cleats on clamp can be hooked over the top front corner of frame member. Slide top portion of shank mount forward until the assembly is in place. Slide clamp bolt back into position and replace clamp bolt nut. Torque both the clamp bolt nut and pivot bolt nut to 50 ft.-lbs. of torque. Attach a sweep to each shank with two 3/8" x 1-1/4" plow bolts, lockwashers and hex nuts.

IMPORTANT: On Live Leaf shanks nuts on both the clamp bolt and the pivot bolt must be torqued to 50 ft.-lbs. for proper field operation.

Mount each Danish shank (Figure 17, Ref. #1) to the frame tubes with two plates (Ref. #2), three 3/8" x 4-1/2" bolts and 3/8" centerlock nuts. Mount the sweep to the shank with a 3/8" x 1-1/2" plow bolt, flat washer, lockwasher and nut.

STEP 21

For ST2 and ST3 wing models loosely attach the two front lock stands with 5/8" u-bolts (for 2-1/2" x 2-1/2" tube) and the two wing lock guides with 5/8" x 6" hex screws (Figure 21). Insert the red 3/4" wing locks through the guide stands (the long lock on the right hand side of the frame). Align stands so that the lock will center the pin-off hole on the inside hinge and tighten into position.

Insert a 5/16" roll pin into the rear hole on each wing lock to prevent it from sliding out of the stands. Pull each wing lock handle fully forward and insert hairpin clips to prevent the lock from sliding rearward.

Carefully fold the wings into transport position with the tractor hydraulics. Remove hairpin clips and push wing locks rearward, locking the wings. Insert the hairpin clips in the hole visible just behind the front lock stands to prevent the wing locks from sliding out of the locked position during transport. Realign guide stands as required for locks to operate smoothly and easily. Wing cylinder mounts may be adjusted to aid in aligning the locks, if this will not adversely affect field performance. Do not operate the unit without wing locks that operate properly.

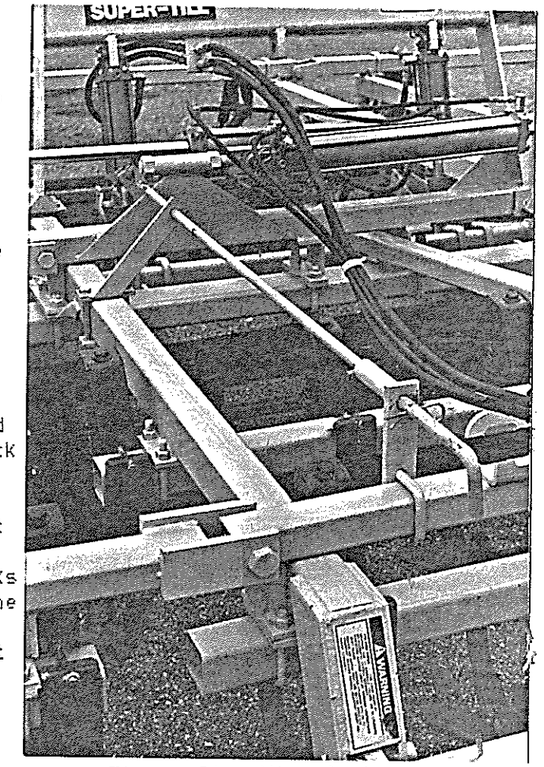

Figure 21. Wing locks

For ST0 wing models carefully fold the wings into transport position with the tractor hydraulics. Insert the red 3/4" wing lock pins into the pin-off holes to lock the wings for transport. Wing cylinder mounts may be adjusted to aid in aligning the locks, if this will not adversely affect field performance. Adjust as required for lock pins to insert easily. Secure the lock pins with klik pins. When wings are unfolded lock pins should be stored in the storage holes on the wing hinge cylinder mounts.

STEP 22

Attach amber and red reflectors as shown on the Decal Placement Chart on page 42. In general amber reflectors go on the front and red reflectors on the rear. All reflectors should be placed where visible as close to the outside most projection of the frame as is practical when the unit is in road transport position.

Check to be sure that all warning decals are in position. Additional decals should be obtained to replace damaged or missing decals.

STEP 23

Attach an ASAE standard SMV Emblem to the rear of the butt cylinder mount and a 5/16" ASAE standard implement tow chain (optional equipment) between the tractor and Super-Till (Figure 22).

Figure 18. Lift chains.

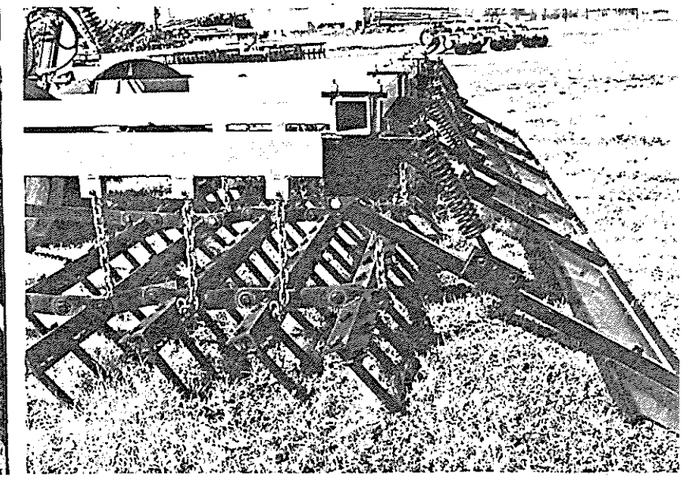
Figure 19. Drag board carrier arms.

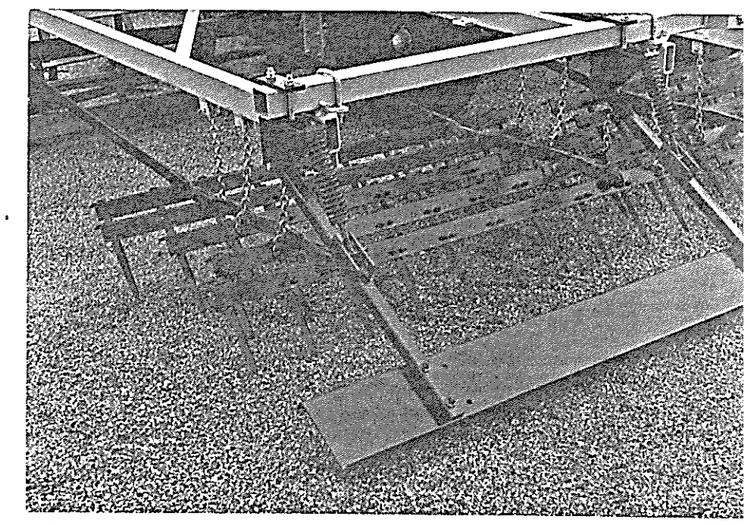
Figure 20. Drag board.

Layout double rolling basket sections roughly three feet behind spike tooth harrows as described on the frame layout figure. Allow 8-1/2" space between ends of basket wires, and be sure baskets are centered on the unit. Attach three carrier arms to each basket section as far apart as possible, but so as to clear frame rails.

Attach drag pipes to the rear of spike tooth harrows, locating them as described on the frame layout figure.

STEP 20

Attach optional mechanical wing gauge wheels to the front cross tube on ST2 or ST3 models between the last two shanks on that bar.

I. Be sure all decals and reflectors are in place and clearly visible.

J. Turn to LUBRICATION section and STORAGE section of this manual for lubrication procedure and preparation for storage.

K. Place owner's manual in plastic bag and strap to unit in a protected location.

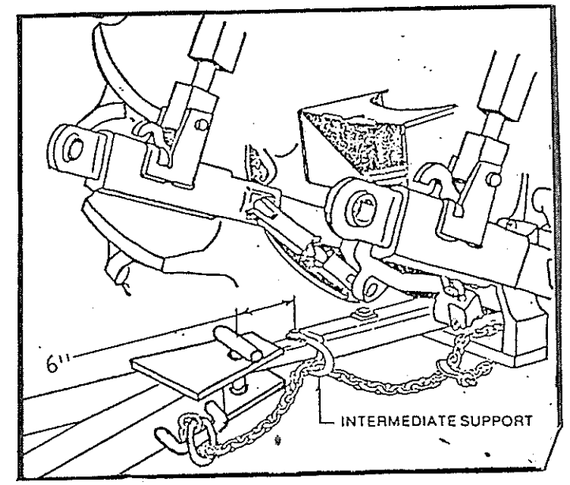

Figure 22. Safety Chain.

⚠ WARNING

WHEN TRAILING THE IMPLEMENT OVER PUBLIC ROADS, THE SMV EMBLEM MUST BE USED. AFTER DUSK, PROVIDE LIGHTING AND REFLECTORS ON THE IMPLEMENT IN ACCORDANCE WITH YOUR STATE LAW TO AVOID SERIOUS INJURIES.

⚠ CAUTION

USE PROPER IMPLEMENT SAFETY CHAIN DURING TRANSPORT TO PREVENT A SERIOUS ACCIDENT FROM LOSS OR FAILURE OF TRANSPORT PIN.

STEP 24.

Final grooming and Check Points.

A. Raise and lower unit 4 or 5 times with lift cylinders to be sure hoses are properly routed. Check transport locks to see if they function properly

B. Fold and unfold the wings 4 or 5 times. Check hose routing to be certain hoses and fittings will not be damaged in normal operation. Check wings to be sure they fold properly. Make sure transport locks slip easily into the holes to lock the wings in transport position. Be sure ground working components do not bind. Shift as required.

C. Check all hydraulic hoses and fittings for leaks, repair as required and recharge with oil. See STEPS 13 and 14 on pages 16-18 for proper charging procedure.

D. Fully extend the lift cylinders and raise the unit for transport. Adjust th tongue ratchet jack to level the unit for transport.

E. Lower wings and adjust spacer bolts between reel frames as required to level wings.

F. For ST0 wing models adjust mounts for wing folding cylinders outward as required to take up slack in the slots at the wing hinge. This will prevent wings from riding up during field operation. Check to be sure wing lock pins still insert freely when wings are folded.

G. For ST2 and ST3 models with Live Leaf Shanks, be sure shank bolts are torqued to 50 ft.-lbs.

H. Check to see that bolts and nuts are properly torqued and pins are securely in place.

DYNAMICS CORP. OF AMERICA, PORTABLE ELEVATOR DIVISION
GLENCOE PRODUCTS, HWY. 22 NORTH, P.O. BOX 160
GLENCOE, MINNESOTA 55336

(CHECK & DELIVERY SHEET) LOAD NO. _____

TO CONSIGNEE : CHECK YOUR SHIPMENT UPON ARRIVAL & RETURN SIGNED CHECKSHEET.

SHIP TO : _____ SHIPPER NO. _____

ADDRESS : _____ ORDER NO. _____

MODEL ST2 AMCO SUPER TILL — PAGE #1

ORD'D	SHP'D	REC'D	BUNDLE and DESCRIPTION	MODEL:	ST2	ST2	ST2	ST2	WT.
					13	19	20	26	
			DE-01-0025	REEL & FRAME	1				761
			DE-01-0026	REEL & FRAME		1			1161
			DE-01-0027	REEL & FRAME			1		392
			DE-01-0028	REEL & FRAME			1	1	403
			DE-01-0029	REEK & FRAME			1	1	403
			DE-01-0030	REEL & FRAME				1	766
			DE-01-0032	MAIN FRAME	1	1	1		1067
			DE-01-0035	MAIN FRAME				1	1598
			DE-01-0037	CROSS TUBE-63"			4	4	36
			DE-01-0038	CROSS TUBE-75"			2		43
			DE-01-0039	CROSS TUBE-144"	3				82
			DE-01-0040	CROSS TUBE-152"				2	86
			DE-01-0041	CROSS TUBE-216"		3			184
			DE-01-0042	CYL MOUNT-RAISING SHAFT	1	2	2	2	23
			DE-01-0043	WING LOCKS			1	1	38
			DE-01-0049	BOLT BAG ASSY	1				31
			DE-01-0050	BOLT BAG ASSY		1			45
			DE-01-0051	BOLT BAG ASSY			1		91
			DE-01-0052	BOLT BAG ASSY				1	108
			DE-01-0059	FRAME RAIL WING-OL		1	1	1	144
			DE-01-0060	FRAME RAIL WING-IL	1	1	1	1	137
			DE-01-0063	FRAME RAIL WING-IR	1	1	1	1	137
			DE-01-0064	FRAME RAIL WING-OR		1	1	1	144
			DE-01-0068	WING HINGE			1	1	298
			DE-01-0070	INSIDE FRONT HINGE				1	93
			DE-01-0071	INSIDE FRONT HINGE	1	1	1		51
			DE-01-0072	INSIDE HINGE-6 ROW			1		107
			DE-01-0073	INSIDE HINGE-8 ROW				1	159
			DE-01-0074	IN.REAR HINGE-6 ROW			1		43
			DE-01-0075	IN. REAR HINGE-8 ROW				1	86
			DE-20-0002	3x8" CYL W/STR CONTROL		2	2	2	37
			DE-20-0003	4x8" CYL W/STR CONTROL	1				57
			DE-20-0004	3x24" CYL			2	2	45
			DE-01-0087	HYDRAULIC KIT		1			6
			DE-01-0088	HYDRAULIC KIT			1		8
			DE-01-0089	HYDRAULIC KIT				1	9
			USA70160	6' HARROW SECTION	2	1	1	2	230
			USA70165	7' HARROW SECTION		2	2	2	248
			PA68447	15x8" RIM 6 HOLE	2			4	29
			PA65050	15x10" RIM 6 HOLE		2	2		31

_____ TOTAL PCS. C1332-1 1-86 TOTAL WT. _____

RECEIPT OF THE ITEMS CHECKED ABOVE IS HEREBY ACKNOWLEDGED : SIGNED : _____

LIST SHORTAGES OR OTHER DISCREPANCIES : DATE :

DYNAMICS CORP. OF AMERICA, PORTABLE ELEVATOR DIVISION
GLENCOE PRODUCTS, HWY. 22 NORTH, P.O. BOX 160
GLENCOE, MINNESOTA 55336

(CHECK & DELIVERY SHEET) LOAD NO. _____

TO CONSIGNEE : CHECK YOUR SHIPMENT UPON ARRIVAL & RETURN SIGNED CHECKSHEET.

SHIP TO : _____ SHIPPER NO. _____

ADDRESS : _____ ORDER NO. _____

MODEL "STO" AMCO SUPER TILL

ORD'D	SHP'D	REC'D	BUNDLE and DESCRIPTION	MODEL:	STO	STO	STO	STO
					13	19	20	26
			DE-01-0025	REEL & FRAME	1			
			DE-01-0026	REEL & FRAME		1		
			DE-01-0027	REEL & FRAME			1	
			DE-01-0028	REEL & FRAME			1	1
			DE-01-0029	REEL & FRAME			1	1
			DE-01-0030	REEL & FRAME				1
			DE-01-0031	MAIN FRAME	1	1	1	
			DE-01-0034	MAIN FRAME				1
			DE-01-0039	CROSS TUBE-144"	1			
			DE-01-0041	CROSS TUBE-216"		1		
			DE-01-0042	CYL MOUNT-RAISING SHAFT	1	1	1	1
			DE-01-0045	BOLT BAG ASSY	1			
			DE-01-0046	BOLT BAG ASSY		1		
			DE-01-0047	BOLT BAG ASSY			1	
			DE-01-0048	BOLT BAG ASSY				1
			DE-01-0057	FRAME RAIL WING-L	1	2	2	2
			DE-01-0058	FRAME RAIL WING-R	1	2	2	2
			DE-01-0067	WING HINGE			1	1
			DE-01-0069	FRONT FRAME MEMBER	1	1		
			DE-01-0072	INSIDE HINGE-6 ROW			1	
			DE-01-0073	INSIDE HINGE-8 ROW				1
			DE-01-0074	IN. REAR HINGE-6 ROW			1	
			DE-01-0075	IN. REAR HINGE-8 ROW				1
			DE-20-0003	4x8" CYL W/STR CONTROL	1	1	1	1
			DE-20-0004	3x24" CYL			2	2
			DE-01-0085	HYDRAULIC KIT			1	
			DE-01-0086	HYDRAULIC KIT				1
			USA70160	6' HARROW SECTION	2	1	1	2
			USA70165	7' HARROW SECTION		2	2	2
			PA68447	15x8" 6 HOLE RIM	2	2	2	4
			OPTIONAL EQUIPMENT					
			PA65050	15x10" 6 HOLE RIM	2	2	2	4
			FA-01-0021	SAFETY CHAIN 5/16"	1	1	1	1
			DE-01-0097	WING LOCK BOLTS			1	1
			AG-20-0017	HYD HOSE KIT	1	1		
			AG-20-0022	HYD HOSE KIT			1	1

_____ TOTAL PCS. C1331-1 1-86 TOTAL WT. _____

RECEIPT OF THE ITEMS CHECKED ABOVE IS HEREBY ACKNOWLEDGED : SIGNED : _____

LIST SHORTAGES OR OTHER DISCREPANCIES : DATE :

DYNAMICS CORP. OF AMERICA, PORTABLE ELEVATOR DIVISION
GLENCOE PRODUCTS, HWY. 22 NORTH, P.O. BOX 160
GLENCOE, MINNESOTA 55336

(CHECK & DELIVERY SHEET) LOAD NO.

TO CONSIGNEE : CHECK YOUR SHIPMENT UPON ARRIVAL & RETURN SIGNED CHECKSHEET.

SHIP TO : SHIPPER NO.

ADDRESS : ORDER NO.

MODEL "ST3" AMCO SUPER TILL — PAGE #1

ORD'D	SHP'D	REC'D	BUNDLE and DESCRIPTION	MODEL:	ST3	ST3	ST3	ST3	WT.
					13	19	20	26	
			DE-01-0025	REEL & FRAME	1				761
			DE-01-0026	REEL & FRAME		1			1161
			DE-01-0027	REEL & FRAME			1		392
			DE-01-0028	REEL & FRAME			1	1	403
			DE-01-0029	REEL & FRAME			1	1	403
			DE-01-0030	REEL & FRAME				1	766
			DE-01-0033	MAIN FRAME	1	1	1		1126
			DE-01-0036	MAIN FRAME				1	1640
			DE-01-0037	CROSS TUBE-63"			6	6	36
			DE-01-0038	CROSS TUBE-75"			3		43
			DE-01-0039	CROSS TUBE-144"	4				82
			DE-01-0040	CROSS TUBE-152"				3	86
			DE-01-0041	CROSS TUBE-216"		4			184
			DE-01-0042	CYL MOUNT-RAISING SHAFT	1	2	2	2	23
			DE-01-0044	WING LOCKS			1	1	44
			DE-01-0053	BOLT BAG ASSY	1				36
			DE-01-0054	BOLT BAG ASSY		1			51
			DE-01-0055	BOLT BAG ASSY			1		97
			DE-01-0056	BOLT BAG ASSY				1	116
			DE-01-0061	FRAME RAIL WING-OL		1	1	1	163
			DE-01-0062	FRAME RAIL WING-IL	1	1	1	1	156
			DE-01-0065	FRAME RAIL WING-IR	1	1	1	1	156
			DE-01-0066	FRAME RAIL WING-OR		1	1	1	163
			DE-01-0068	WING HINGE			1	1	298
			DE-01-0070	INSIDE FRONT HINGE				1	93
			DE-01-0071	INSIDE FRONT HINGE	1	1	1		51
			DE-01-0072	INSIDE HINGE-6 ROW			1		107
			DE-01-0073	INSIDE HINGE-8 ROW				1	159
			DE-01-0074	IN.REAR HINGE-6 ROW			1		42
			DE-01-0075	IN.REAR HINGE-8 ROW				1	86
			DE-20-0002	3x8" CYL W/STROKE CONT.		2	2	2	37
			DE-20-0003	4x8" CYL W/STROKE CONT.	1				57
			DE-20-0004	3x24" CYL			2	2	45
			DE-01-0087	HYDRAULIC KIT		1			6
			DE-01-0088	HYDRAULIC KIT			1		6
			DE-01-0089	HYDRAULIC KIT				1	9
			USA70160	6' HARROW SECTION	2	1	1	2	230
			USA70165	7' HARROW SECTION		2	2	2	248
			PA68447	15x8" RIM 6-HOLE	2			4	29
			PA65050	15x10" RIM 6-HOLE		2	2		31

_____ TOTAL PCS. C1334-1 1-86 TOTAL WT. _____

RECEIPT OF THE ITEMS CHECKED ABOVE IS HEREBY ACKNOWLEDGED : SIGNED : _____

LIST SHORTAGES OR OTHER DISCREPANCIES : DATE :

DYNAMICS CORP. OF AMERICA, PORTABLE ELEVATOR DIVISION
GLENCOE PRODUCTS, HWY. 22 NORTH, P.O. BOX 160
GLENCOE, MINNESOTA 55336

(CHECK & DELIVERY SHEET) LOAD NO.

TO CONSIGNEE : CHECK YOUR SHIPMENT UPON ARRIVAL & RETURN SIGNED CHECKSHEET.

SHIP TO : SHIPPER NO.

ADDRESS : ORDER NO.

MODEL ST2 AMCO SUPER TILL — PAGE #2

ORD'D	SHP'D	REC'D	BUNDLE and DESCRIPTION	MODEL:	ST2	ST2	ST2	ST2
					13	19	20	26
			SHANK OPTION "A" LIVE LEAF					
			USA69735	LIVE LEAF SHANK	15	25	25	33
			58478	10" SWEEP	15	25	25	33
			PA54508	PLOW BOLT BAG-~~24~~ 12				1
			PA54509	PLOW BOLT BAG-~~50~~ 25	1	1	1	1
			SHANK OPTION "B" DANISH					
			USA70180	DANISH SHANK	23	35	35	47
			P6060	4" DANISH SWEEP	23	35	35	47
			PA54510	PLOW BOLT BAG-24	1	2	2	
			PA54511	PLOW BOLT BAG-50				1
			OPTIONAL EQUIPMENT					
			MAIN FRAME DUAL KIT FOR ST2-19 & 20 (DELETE 1-DE010032 & 2-PA65050 FROM UNIT)					
			DE-01-0098	MAIN FRAME-DUAL		1	1	1
			PA68447	15x8" RIM 6-HOLE		4	4	
			AG-20-0018	HYD HOSE KIT	1			
			AG-20-0020	HYD HOSE KIT		1		
			AG-20-0023	HYD HOSE KIT			1	1
			PA65050	15 x 10" RIM 6-HOLE	2			4
			FA-01-0021	SAFETY CHAIN 5/16"	1	1	1	1
			DE-01-0097	WING LOCK BOLTS			1	1
			DE-01-0100	Gauge Wheels - 3 x 3			2	2

_____ TOTAL PCS. C1333-1 1-86 TOTAL WT. _____

RECEIPT OF THE ITEMS CHECKED ABOVE IS HEREBY ACKNOWLEDGED : SIGNED : _____

LIST SHORTAGES OR OTHER DISCREPANCIES : DATE :

DYNAMICS CORP. OF AMERICA, PORTABLE ELEVATOR DIVISION
GLENCOE PRODUCTS, HWY. 22 NORTH, P.O. BOX 160
GLENCOE, MINNESOTA 55336

(CHECK & DELIVERY SHEET) LOAD NO.

TO CONSIGNEE : CHECK YOUR SHIPMENT UPON ARRIVAL & RETURN SIGNED CHECKSHEET.

SHIP TO : SHIPPER NO.

ADDRESS : ORDER NO.

OPTIONAL ATTACHMENTS FOR AMCO MODEL SUPER TILL

ORD'D	SHP'D	REC'D	BUNDLE and DESCRIPTION	QTY	WT.
			DE-14-0001 DRAG PIPE FOR STO,ST2 & ST3-13 MODELS		
			DE-01-0092 DRAG PIPE-74½"	2	
			DE-14-0002 DRAG PIPE FOR STO,ST2 & ST3-19 & -20 MODELS		
			DE-01-0092 DRAG PIPE-74½"	1	
			DE-01-0093 DRAG PIPE-82"	2	
			DE-14-0003 DRAG PIPE FOR STO,ST2 & ST3-26 MODELS		
			DE-01-0092 DRAG PIPE-74½"	2	
			DE-01-0093 DRAG PIPE-82"	2	
			DE-14-0004 METAL DRAG BOARD FOR STO, ST2 & ST3-13 MODELS		
			DE-01-0090 METAL DRAG BOARD-78"	2	
			DE-14-0005 METAL DRAG BOARD FOR STO, ST2 & ST3-19 & 20 MODELS		
			DE-01-0090 METAL DRAG BOARD-78"	1	
			DE-01-0091 METAL DRAG BOARD-84"	2	
			DE-14-0006 METAL DRAG BOARD FOR STO, ST2 & ST3-26 MODELS		
			DE-01-0090 METAL DRAG BOARD-78"	2	
			DE-01-0091 METAL DRAG BOARD-84"	2	
			DE-14-0007 DOUBLE ROLLING BASKET FOR STO, ST2 & ST3-13 MODELS		
			USA40695 14 BASKET DOUBLE ROLLING BASKET	2	236
			USA40940 CARRIER ARM (PAIR)	3	63
			DE-14-0008 DOUBLE ROLLING BASKET FOR STO, ST2 & ST3-19 & -20 MODELS		
			USA40695 14 BASKET DOUBLE ROLLING BASKET	3	236
			USA40935 CARRIER ARM-SINGLE	1	31
			USA40940 CARRIER ARM (PAIR)	4	63
			DE-14-0009 DOUBLE ROLLING BASKET FOR STO, ST2 & ST3-26 MODELS		
			USA40695 14 BASKET DOUBLE ROLLING BASKET	4	236
			USA40710 CARRIER ARM (PAIR)	6	63

TOTAL PCS. C1336-1 1-86 TOTAL WT.

RECEIPT OF THE ITEMS CHECKED ABOVE IS HEREBY ACKNOWLEDGED : SIGNED :

LIST SHORTAGES OR OTHER DISCREPANCIES : DATE :

DYNAMICS CORP. OF AMERICA, PORTABLE ELEVATOR DIVISION
GLENCOE PRODUCTS, HWY. 22 NORTH, P.O. BOX 160
GLENCOE, MINNESOTA 55336

(CHECK & DELIVERY SHEET) LOAD NO.

TO CONSIGNEE : CHECK YOUR SHIPMENT UPON ARRIVAL & RETURN SIGNED CHECKSHEET.

SHIP TO : SHIPPER NO.

ADDRESS : ORDER NO.

MODEL "ST3" AMCO SUPER TILL PAGE #2

ORD'D	SHP'D	REC'D	BUNDLE and DESCRIPTION MODEL:	ST3	ST3	ST3	ST3	W
				13	19	20	26	
			SHANK OPTION "A" LIVE LEAF					
			USA69735 LIVE LEAF SHANK	15	25	25	33	
			58478 10" SWEEP	15	25	25	33	
			PA54508 PLOW BOLT BAG-~~24~~ 12				1	
			PA54509 PLOW BOLT BAG-~~50~~ 25	1	1	1	1	
			SHANK OPTION "B" DANISH					
			USA70180 DANISH SHANK	23	35	35	47	
			P6060 4" DANISH SWEEP	23	35	35	47	
			PA54510 PLOW BOLT BAG-24	1	2	2		
			PA54511 PLOW BOLT BAG-50				1	
			OPTIONAL EQUIPMENT					
			MAIN FRAME DUAL KIT FOR ST3-019 & ST3-020 MODELS (DELETE 1-DE-010033 & 2-PA65050 FROM UNIT)					
			DE-01-0099 MAIN FRAME-DUAL		1	1		1
			PA68447 15"x8" RIM 6-HOLE		4	4		
			AG-20-0019G HYD HOSE KIT	1				
			AG-20-0021G HYD HOSE KIT		1			
			AG-20-0024G HYD HOSE KIT			1	1	
			PA65050 15x10" RIM 6 HOLE	2			4	
			FA-01-0021 SAFETY CHAIN 5/16"	1	1	1	1	
			DE-01-0097 WING LOCK BOLTS			1	1	
			DE-01-0100 GAUGE WHEELS - 3 x 3			2	2	

TOTAL PCS. C1335-1 1-86 TOTAL WT.

RECEIPT OF THE ITEMS CHECKED ABOVE IS HEREBY ACKNOWLEDGED : SIGNED :

LIST SHORTAGES OR OTHER DISCREPANCIES : DATE :

STORAGE

Proper storage will add to the life of your Super-Till and assure its being in good condition for the next season. The following procedure is recommended.

CLEAN off all foreign matter and thoroughly lubricate the Super-Till.

TIGHTEN loose bolts and replace any damaged or missing parts.

REPAINT the Super-Till where the original paint has worn off.

COAT the hydraulic cylinder rod with a good rust preventative or leave cylinder rods retracted.

STORE in a dry place, with the reels resting on boards.

ROTATE carefully each reel and check for worn or damaged blades, shafts, bearings and other parts which may need repairing.

GREASE reel bearings before operating season. Grease each bearing after each season and turn reels one full turn so that grease will wrap around seals and seal race. This will help prevent seals from getting hard, will keep rust off raceway and will form a barrier to outside moisture. Grease with a small hand gun using a good grade No. 2 grease (lithium base).

TRANSPORT

Extreme caution is required when transporting any machinery on roads or highways. (See Warnings at right). Remember you are responsible for compliance with State and Local laws regarding lighting, reflectors, and SMV emblems as well as length and width. Before transporting the unit check your tires for proper inflation. Be sure that hub bolts and nuts are tight. Wheel bearings should be checked for proper adjustment and lubrication prior to roading the disk over long distances.

The Super-Till is equipped with rockshaft transport locks (Figure 23). Locks should be engaged when in transport.

Wing locks on ST2 and ST3 models (Figure 24) and wing lock pins on STO models should always be used when wings are raised. Wing locks should be in storage position when not in use.

The drawbar pin should be in good condition and strong enough to secure the unit to the tractor. Secure the drawbar pin to keep it in place. The drawbar should be secured to prevent swinging.

⚠ WARNING

WHEN TRAILING THE IMPLEMENT OVER PUBLIC ROADS, THE SMV EMBLEM MUST BE USED. AFTER DUSK, PROVIDE LIGHTING AND REFLECTORS ON THE IMPLEMENT IN ACCORDANCE WITH YOUR STATE LAW TO AVOID SERIOUS INJURIES.

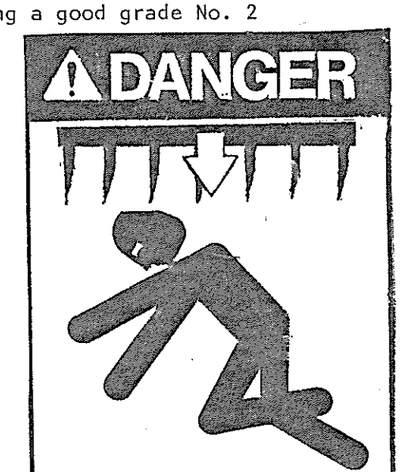

1. NEVER STAND UNDER WINGS OF IMPLEMENT. WINGS MAY FALL CAUSING A SERIOUS OR FATAL ACCIDENT DUE TO AIR IN THE HYDRAULIC SYSTEM, HYDRAULIC OR MECHANICAL FAILURE, OR ACCIDENTAL OPERATION OF HYDRAULIC CONTROLS.
2. WHEN FOLDED ALWAYS SECURE WINGS WITH WING LOCK PINS TO PREVENT FALLING.
3. ALWAYS MAKE SURE CYLINDERS AND HOSES ARE FULLY CHARGED WITH OIL AIR CAN ENTER SYSTEM THROUGH REPEATED COUPLING OR LEAKING CONNECTIONS. MAKE REPAIRS IMMEDIATELY. FREQUENTLY CHECK FOR MISSING OR DAMAGED PINS AT CYLINDER AND HINGE CONNECTIONS. REFER TO OWNER'S MANUAL FOR PROPER HYDRAULIC SYSTEM CHARGING AND OTHER INSTRUCTIONS. REPLACEMENT PARTS MUST MEET ORIGINAL SPECIFICATIONS TO PREVENT FAILURE.
4. FOR BEST SAFETY STORE IMPLEMENT WITH WINGS LOWERED. BE ALERT TO DANGERS FOR UNSUSPECTING CHILDREN OR OTHERS.

lubrication

Careful and regular attention to lubrication will greatly increase the life of the Super-Till. For economical and efficient operation, proper lubrication of the self leveling rod, the tongue ratchet jack, rockshaft pivots, depth collars, wheel hubs and bearings on the reels is necessary.

Be sure the grease fittings are free of dirt or paint before using the grease gun. Replace any damaged or missing fittings. Use a good grade No. 2 grease (lithium base). Never use greases which contain metallic additives. Always make sure that grease is clean and not contaminated with dirt or other foreign matter.

Grease self leveling rod each week or 50 hours of operation. Grease at the start of each season and at the end of each season.

Grease tongue ratchet jack each week or 50 hours of operation.

A high carbon steel pin with a grease fitting joins each rockshaft to the main frame in two places. These eight pins should be greased every 50 hours of operation. They should also be greased at the beginning and the end of the season. It will take several strokes to initially fill the pivot journals. Grease the pivot pins until grease appears at the ends of the pivot journals.

The wheel hubs are equipped with tapered roller bearings. These hubs are packed with grease and adjusted at the factory. They should be repacked and the spindle nut properly adjusted each disking season or every 300 hours of operation. Use a good grade of clean lithium soap base grease. See the Maintenance section of this manual for procedure.

Grease depth collars on lift cylinders each week or 50 hours of operation.

Grease reel bearings each week or 50 hours of operation.

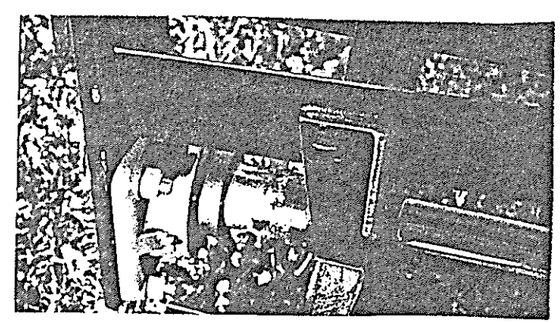

⚠ WARNING

ALTHOUGH WINGS FOLD WELL PAST 90° INBOARD, UNLEVEL GROUND OR AN UNEXPECTED JAR CAN ALLOW WINGS TO FALL. FOLLOW ALL SAFETY PRECAUTIONS REGARDING FOLDED WINGS TO PREVENT SERIOUS OR FATAL ACCIDENTS.

operating instructions

Your new AMCO Super-Till has been set up, inspected and adjusted by your dealer before delivery. However, before using your new machine or one that has been stored, make certain that all nuts and bolts are tight, all roll pins inserted snugly, all cotter pins spread and that the implement has been lubricated.

This instruction manual should be carefully and thoroughly read to enable the operator to safely and efficiently operate the machine. The right and left sides of the unit are determined by standing at the rear of the unit and facing the direction of travel.

Refer to the tractor owner's manual for complete tractor operating procedure. Be sure to read and comply with safe transport and operating procedure for the Super-Till, as described in the Transport section and in warnings throughout the manual.

DEPTH CONTROL: Stroke control collars on lift cylinders provide positive depth control with the wheels and allow infinite adjustment. Regular greasing will prevent problems with adjustment.

The Super-Till should be operated no deeper than necessary to level the soil and insure proper herbicide incorporation. Chemicals are normally incorporated to approximately 1/2 the operation depth.

Models equipped with Danish shanks obtain the most effective vibrating action when operated at 6-8 mph and no deeper than 4".

FRONT TO REAR LEVELING: The tongue ratchet jack levels the unit front to rear. The self-leveling rod maintains this front to rear tilt, regardless of depth or transport height. Excessive tilt may cause irregular wear on sweeps on shank models

Shortening the tow links on the spike tooth harrows tends to lift the front harrow bar to help eliminate trash plugging. Angle of the spikes themselves is preset and cannot be changed. If the spike tooth harrow is too aggressive, the harrow can be raised by adjusting the lift chains underneath the frame rails.

Optional spring loaded dragboards feature three position depth settings, can be quickly adjusted with the tongue ratchet jack and are reverisible for long life.

Before setting optional double rolling basket harrows make sure (1) the Super-Till frame is level front to rear, and (2) the unit is set on the depth stops at the desired depth.

Generally, adjust the front row of baskets to run 1" to 1-1/2" higher than the back row (Figure 26). To adjust, remove adjusting pin (Ref. #1) from the lower carrier arm link and screw it in to raise the front basket or out to lower the front basket.

NOTE: If dirt tends to build up in front of the front basket, it most likely needs to be raised.

Adjust the height so that the rear basket is running 2" to 3" deep. Eight different height adjustments can be obtained by using the two holes in the pressure rod (Ref. #2) and the four holes in the upper carrier arm.

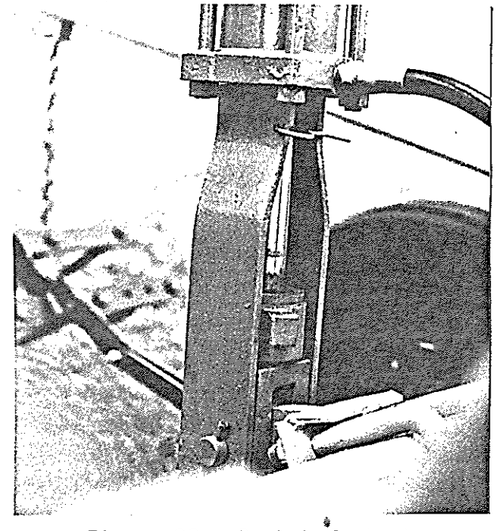

Figure 23. Rockshaft Lock.

⚠ WARNING

ALWAYS SECURE FOR TRANSPORT BY USING THE ROCKSHAFT LOCKS FAILURE OF HYDRAULICS CAN CAUSE A SUDDEN OR DANGEROUS FALL.

⚠ WARNING

FAILURE TO FOLLOW RECOMMENDATIONS REGARDING TIRE SELECTION, INFLATION PROCEDURES, PRESSURES, AND TRANSPORT SPEEDS MAY RESULT IN SERIOUS OR FATAL INJURY DUE TO EXPLOSIVE TIRE AND WHEEL REACTION WHILE INFLATING, OR BLOWOUTS IN TRANSPORT. READ AND COMPLY WITH TIRE MANUFACTURER'S SPECIFICATIONS, INSTRUCTIONS AND WARNINGS.

⚠ CAUTION

USE PROPER IMPLEMENT SAFETY CHAIN DURING TRANSPORT TO PREVENT A SERIOUS ACCIDENT FROM LOSS OR FAILURE OF TRANSPORT PIN.

TRANSPORTING con't

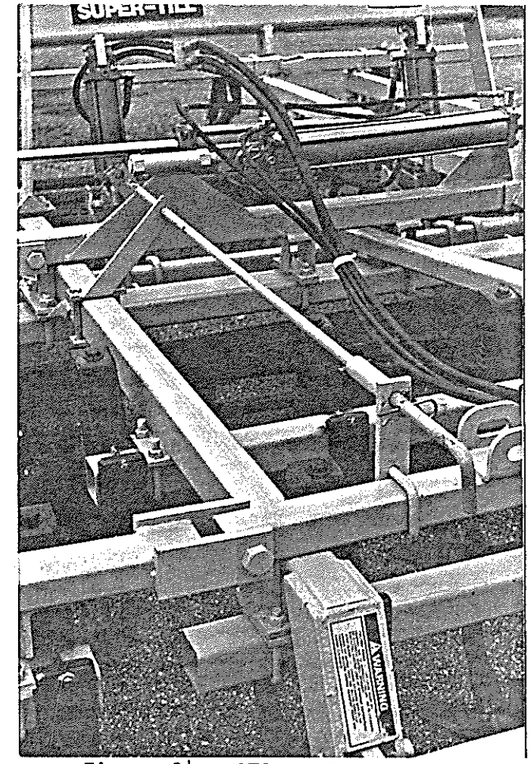

Figure 24. ST2 & ST3 Wing Lock

A transport safety chain must be attached between the pull tongue and the tractor to prevent separation in case of accidental loss or failure of the drawbar pin (Figure 25). The chain system must be of 11,500 pounds minimum ultimate tensile strength, be attached securely at each end and pass through a shackle located within 6 inches of the drawbar pin. Mounting brackets are standard equipment on the pull tongue. An AMCO chain which meets ASAE standards for towed implements can be purchased as optional equipment from your authorized AMCO Dealer.

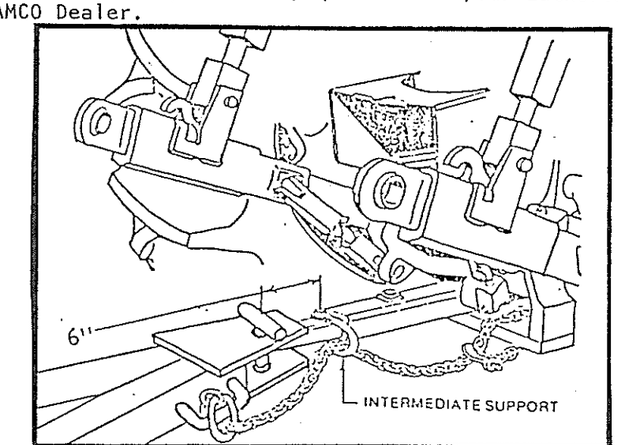

Figure 25. Safety Chain.

WING LEVELING: Spacer bolts between reel frames at the hinges (Figure 6, Assembly section) should be set and locked to prevent wings from penetrating deeper than the center section and to be near level when the machine is raised for turning.

<u>512 and 513 shank models</u> are equipped with 2-9/16" slots on inside wing hinges to allow wings to float upward. Rod clevis pins on wing folding cylinders should be free when wings are lowered.

<u>Optional mechanical wing gauge wheels</u> allow wings to float upward, with positive wing depth control.

<u>512 non-shank models</u> are equipped with 1-9/16" slots on inside wing hinges. Rod clevis pins should be snug in the bottom of the slots during field operation to prevent wings from riding out of the ground. Adjust wing folding cylinder mounts to obtain the proper setting. Be sure than wing lock pins can still be easily inserted after adjusting.

A 1" x 6-1/2" hex bolt with hex nuts and lockwashers (optional equipment) can be inserted between wing and center section reel frames to positively lock wings down for field operation. Adjust spacer bolts so that when lock bolts are tight, wings are level during field operation.

1. <u>NEVER</u> STAND UNDER WINGS OF IMPLEMENT. WINGS MAY FALL CAUSING A SERIOUS OR FATAL ACCIDENT DUE TO AIR IN THE HYDRAULIC SYSTEM, HYDRAULIC OR MECHANICAL FAILURE, OR ACCIDENTAL OPERATION OF HYDRAULIC CONTROLS.
2. WHEN FOLDED ALWAYS SECURE WINGS WITH WING LOCK PINS TO PREVENT FALLING
3. ALWAYS MAKE SURE CYLINDERS AND HOSES ARE FULLY CHARGED WITH OIL AIR CAN ENTER SYSTEM THROUGH REPEATED COUPLING OR LEAKING CONNECTIONS. MAKE REPAIRS <u>IMMEDIATELY</u>. FREQUENTLY CHECK FOR MISSING OR DAMAGED PINS AT CYLINDER AND HINGE CONNECTIONS. REFER TO OWNER'S MANUAL FOR PROPER HYDRAULIC SYSTEM CHARGING AND OTHER INSTRUCTIONS. REPLACEMENT PARTS MUST MEET ORIGINAL SPECIFICATIONS TO PREVENT FAILURE.
4. FOR BEST SAFETY STORE IMPLEMENT WITH WINGS LOWERED. BE ALERT TO DANGERS FOR UNSUSPECTING CHILDREN OR OTHERS.

STANDING BETWEEN TRACTOR AND IMPLEMENT WHEN HITCHING COULD RESULT IN SERIOUS BODILY INJURY.

RIDING ON IMPLEMENT MAY CAUSE A SERIOUS OR FATAL ACCIDENT.

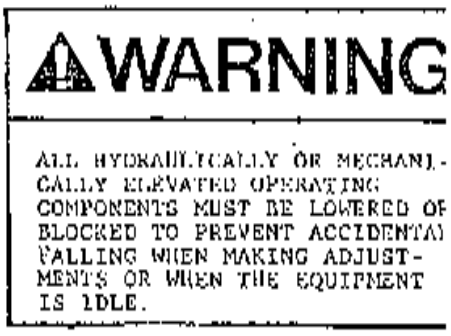

ALL HYDRAULICALLY OR MECHANICALLY ELEVATED OPERATING COMPONENTS MUST BE LOWERED OR BLOCKED TO PREVENT ACCIDENTAL FALLING WHEN MAKING ADJUSTMENTS OR WHEN THE EQUIPMENT IS IDLE.

DO NOT STEP ON TOP OF IMPLEMENT TIRE WHEN SERVICING OR ADJUSTING IMPLEMENT. TIRE CAN ROTATE UNEXPECTEDLY IF NOT FIRM AGAINST GROUND AND CAUSE A SERIOUS OR FATAL INJURY DUE TO A FALL ON THE IMPLEMENT.

Products
Portable Elevator Division, Dynamics Corporation of America
P. O. Box 1107, Yazoo City, Mississippi 39194 / 601 / 746-4464

I N S E R T

January 13, 1987

SUPER-TILL Operator's Manual

Page 34

For STO Models, Serial numbers 860200746 and below

WARNING: DO NOT REMOVE SLOT PLUGS FROM WING HINGES. Removal could result in INJURY or DEATH due to falling wings.

Slot plugs help prevent wings from riding upward during field operation and should be used at all times. If plugs are removed, operators may adjust wing cylinder mounts outward too far, preventing wing from folding over center properly, and making wing locks inoperable. Be sure that this insert and the manual are transferred to the new owner in case of resale.

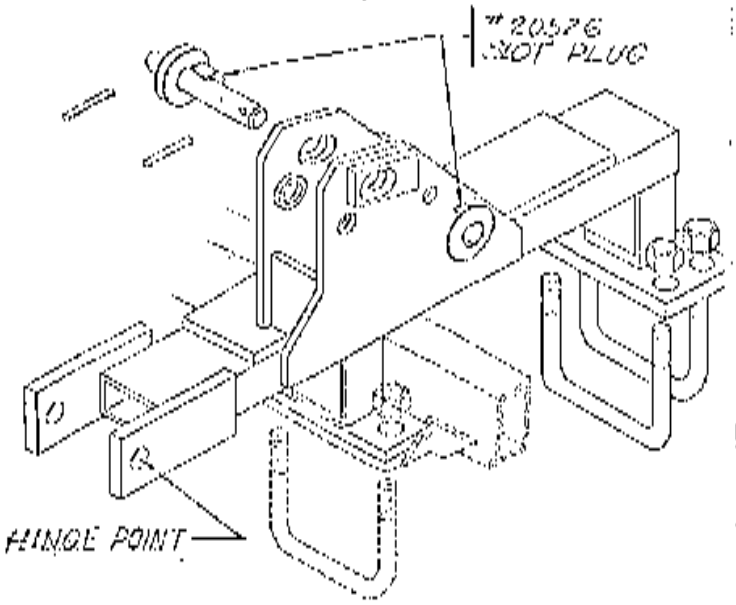

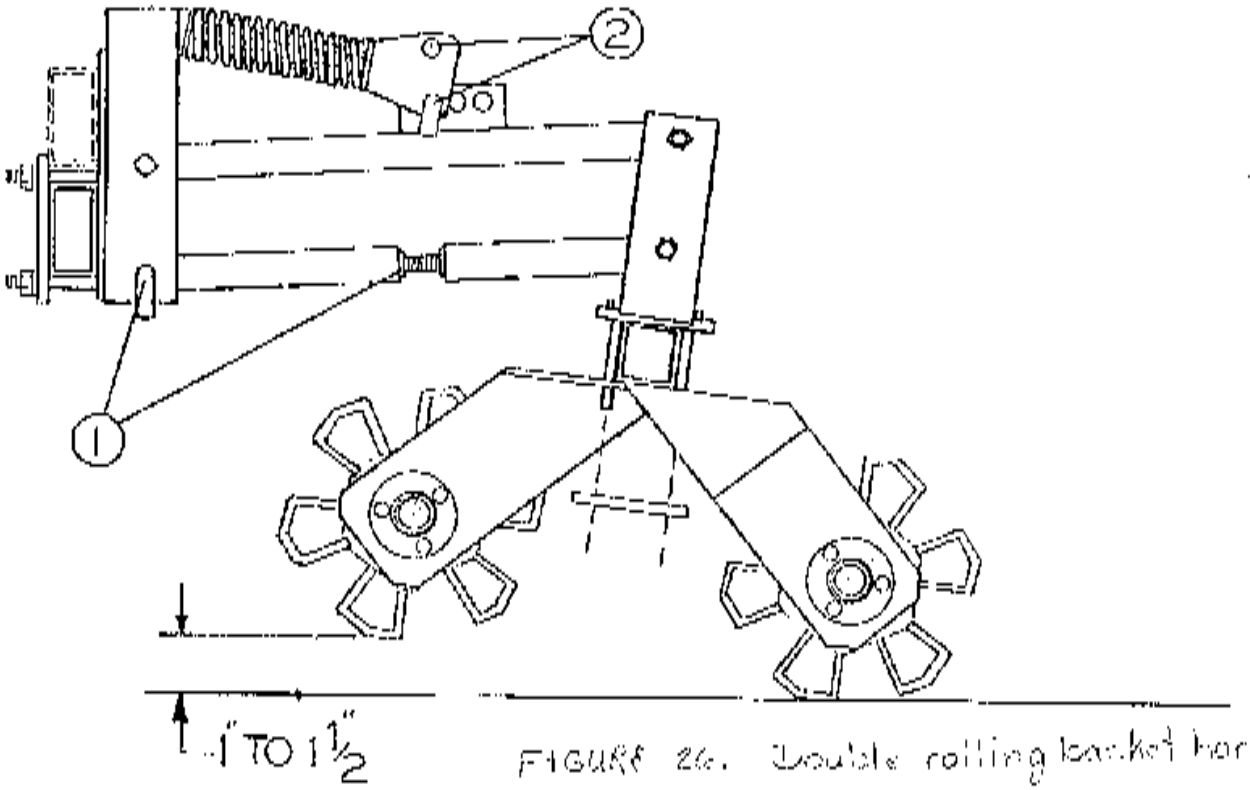

FIGURE 26. Double rolling basket harrow

operating tips

OPERATING TIPS FOR LONG LIFE AND SATISFACTORY PERFORMANCE

1. Match the Super-Till with the proper size tractor. Too much horsepower and speed will result in excessive maintenance cost.

2. Lubricate with clean grease at the recommended intervals.

3. Use good quality tires, hoses, and hydraulic cylinders.

4. Use the tongue ratchet jack, proper cutting depth, and travel speed to get level and smooth fields.

5. Wash corrosive materials such as fertilizer and herbicides from the unit when it is not in use.

6. Insist on genuine AMCO replacement parts. Items such as bearings and shanks look alike but are not as reliable as original equipment.

7. Never allow unsafe conditions or operating practices. Your safety is of prime importance.

8. Raise the Super-Till on its transport wheels when turning. Failure to do so will result in bent or broken shanks and excessive strain on the tongue and main frame.

9. Reduce operating speed in areas containing stumps or rocks to reduce breakage.

10. Do not operate with wings folded. Operating with wings folded will cause undue strain on ground working parts.

ROCKSHAFT PIVOT PIN REPAIR: The rockshafts are equipped with replaceable, regreasable, bronze bushings. If properly lubricated they should last for several seasons. The bushings should be checked each disking season for excessive pivot pin or bushing wear. Worn bushings and pivot pins should be replaced. Failure to replace worn or damaged parts will damage other parts.

REEL BEARINGS:

Misalignment is a major cause of bearing failure. Inspect reels daily for misaligned bearing risers and damaged reel parts which cause ball bearings to bind in the raceway. Get in the habit of turning each reel several rounds to check for binding, grinding or "squawking" sounds. If reels turn smoothly, bearing misalignment should not be a problem. Realign bearing risers and replace damaged parts as required. If a bearing is operated for several hours after failure, both bearings should be replaced, since the unfailed bearing is usually damaged by excessive pounding and misalignment caused by the broken bearing.

Reel bearing and collars are installed by your dealer. If it becomes necessary for you to loosen a collar, retighten it by following these instructions:

A. Be sure the collar is on inner race of bearing.
B. Turn collar in the same direction of the reel rotation.
C. With a light hammer and punch, tap the collar 3 or 4 times.
D. This will tighten collar as tight as necessary. Further tightening can distort the inner race resulting in premature bearing failure.
E. Lock the collar with the set screw provided.

New reel bearings can be purchased at your AMCO dealer in a package consisting of bearing, housing and grease fitting.

⚠WARNING

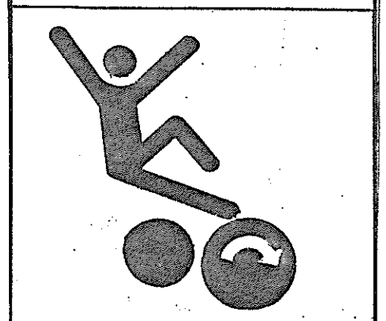

DO NOT STEP ON TOP OF IMPLEMENT TIRE WHEN SERVICING OR ADJUSTING IMPLEMENT. TIRE CAN ROTATE UNEXPECTEDLY IF NOT FIRM AGAINST GROUND AND CAUSE A SERIOUS OR FATAL INJURY DUE TO A FALL ON THE IMPLEMENT.

⚠CAUTION

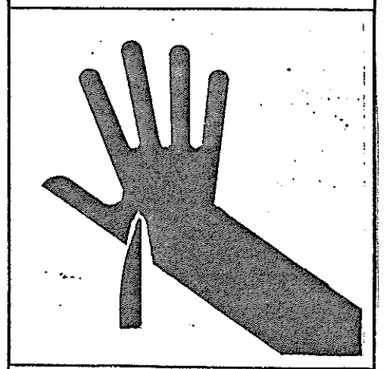

CARE SHOULD BE EXERCISED IF WORKING NEAR REEL BLADES TO AVOID SERIOUS CUTS FROM SHARP EDGES.

maintenance

Keep all bolts tight.

A. Check before placing in service.
B. Visually inspect all bolts daily.
C. Check after first 50 hours or one week's operation.
D. Check each season.

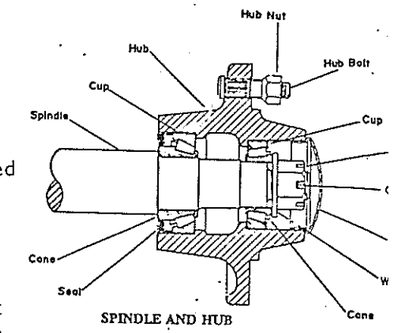

SPINDLE AND HUB

WHEEL BEARING REPAIR: Wheel bearings should be repacked with grease and adjusted annually. Under extreme conditions, they should be serviced more frequently. Check occasionally for excessive end play.

To disassemble the hub, remove the dust cap by prying around it. Remove the cotter pin, slotted nut and flat washer. Carefully remove the hub and bearings from the spindle. Inspect all parts for wear and replace if necessary. Use the following procedure when repairing or servicing wheel hubs:

1. Clean all parts that are to be re-used.

2. Carefully inspect the metal case on the grease seal. Discard seal if case is ben or damaged. Check seal lips for cuts, tears or excessive wear. Check the seals and t spindle prior to reassembly. Use emory cloth to smooth grease seal seats and provide a smooth sealing surface.

⚠WARNING

ALL HYDRAULICALLY OR MECHANICALLY ELEVATED OPERATING COMPONENTS MUST BE LOWERED OR BLOCKED TO PREVENT ACCIDENTAL FALLING WHEN MAKING ADJUSTMENTS OR WHEN THE EQUIPMENT IS IDLE.

3. Carefully inspect both sets of bearing cones. Bearin bore and rollers must be smooth and free of nicks and scratches. Replace cones if damaged.

4. Inspect hub to make sure that hub bolts have a good thread. Bearing cups must be smooth and free of surface blemishes. Cups must be removed from the hub and replace if damaged. Cups should be fully pressed into the hub and rest squarely against the shoulder inside the hub. Hub cap and grease seal should fit snugly inside the hub Severely damaged hubs should be replaced.

5. Threads on spindle must be in good condition. Bearing cone seats must be smooth and free of blemishes. Bearing cones must fit squarely on spindle.

6. Spindle washer, slotted nut, cotter pin and hub cap must be in good condition. Replace if worn or damaged.

7. To reassemble the hub, repack each bearing cone with grease and fill the hub cavity 1/3 full of grease. Place inner bearing assembly in hub, press grease seal into the hub and carefully re-install the hub on the spindle. Install the outer bearing assembly into the hub, and replace the spindle washer and slotted nut. Tighten the slotted nut, to seat the bearings, until the hub binds when rotated. Check seal lips to be certain they are turned out to exclude contamination. Back the slotted nut off to the nearest slot. Rotate the hub five or six revolutions in each direction to seat all parts. Re-tighten the slotted nut while rotating the hub. When the hub binds, back the slotted nut off to the nearest slot and secure with a cotter pin. Install dust cap and remount wheel on hub.

⚠WARNING

RIDING ON IMPLEMENT MAY CAUSE A SERIOUS OR FATAL ACCIDENT.

HYDRAULIC SYSTEMS: Hydraulic hoses must be inspected daily to insure there are no cuts or wear points that could become hazardous if they burst or start a small, invisible leak. Particularly important inspection points are in the vicinity of hydraulic hose support members, hose end fittings, and cylinder fittings.

HYDRAULIC CYLINDER REPAIR:

A. Remove hoses and fittings from cylinder.
B. Remove cylinder from unit and clean outside of cylinder.
C. Disassemble cylinder by removing the rods and nut from end of cylinder rod. Slip piston and gland off cylinder rod.

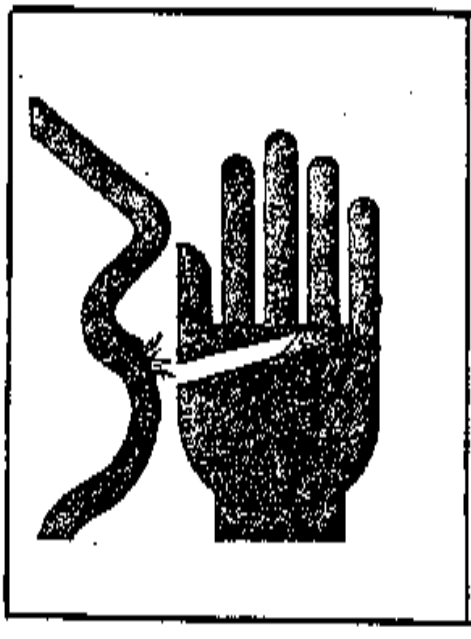

⚠ WARNING

HYDRAULIC SYSTEMS ARE HIGHLY PRESSURIZED. ESCAPING HYDRAULIC FLUID, EVEN AN INVISIBLE PIN HOLE LEAK, CAN PENETRATE BODY TISSUES CAUSING SERIOUS INJURY. USE A PIECE OF WOOD OR CARDBOARD WHEN LOOKING FOR LEAKS. NEVER USE THE HANDS OR OTHER PARTS OF THE BODY.

RELIEVE HYDRAULIC PRESSURE BEFORE DISCONNECTING CIRCUITS. WHEN REASSEMBLING, MAKE ABSOLUTELY CERTAIN THAT ALL CONNECTIONS ARE TIGHT. IF INJURED BY HYDRAULIC FLUID ESCAPING UNDER PRESSURE, SEE A DOCTOR IMMEDIATELY. SERIOUS INFECTION OR REACTION MAY OCCUR IF MEDICAL ATTENTION IS NOT GIVEN AT ONCE.

⚠ DANGER

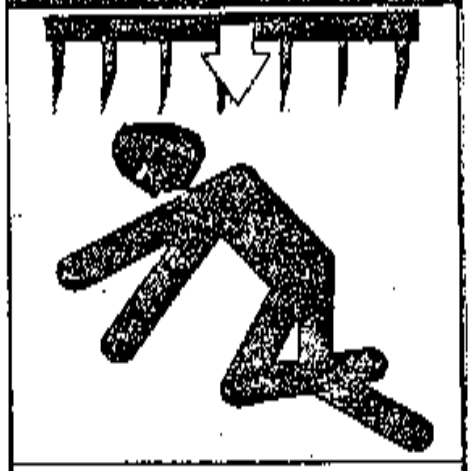

1. NEVER STAND UNDER WINGS OF IMPLEMENT. WINGS MAY FALL CAUSING A SERIOUS OR FATAL ACCIDENT DUE TO AIR IN THE HYDRAULIC SYSTEM, HYDRAULIC OR MECHANICAL FAILURE, OR ACCIDENTAL OPERATION OF HYDRAULIC CONTROLS.
2. WHEN FOLDED ALWAYS SECURE WINGS WITH WING LOCK PINS TO PREVENT FALLING.
3. ALWAYS MAKE SURE CYLINDERS AND HOSES ARE FULLY CHARGED WITH OIL. AIR CAN ENTER SYSTEM THROUGH REPEATED COUPLING OR LEAKING CONNECTIONS. MAKE REPAIRS IMMEDIATELY. FREQUENTLY CHECK FOR MISSING OR DAMAGED PINS AT CYLINDER AND HINGE CONNECTIONS. REFER TO OWNER'S MANUAL FOR PROPER HYDRAULIC SYSTEM CHARGING AND OTHER INSTRUCTIONS. REPLACEMENT PARTS MUST MEET ORIGINAL SPECIFICATIONS TO PREVENT FAILURE.
4. FOR BEST SAFETY STORE IMPLEMENT WITH WINGS LOWERED. BE ALERT TO DANGERS FOR UNSUSPECTING CHILDREN OR OTHERS.

D. Carefully clean and inspect all parts for wear or damage. Small nicks, scratches or blemishes on rod and inside of barrel should be smoothed with fine steel wool or emery cloth. Replace parts that cannot be repaired.

E. Remove all "O" Rings from piston and gland. Replace all seals with new parts.

F. Assemble cylinder using care to prevent damage to "O" Rings and Seals.

G. Replace cylinder on unit and attach hoses. Check cylinder for leaks.

H. Charge hydraulic cylinders with oil as described in Assembly section, Steps 13 and 14.

GENERAL:

Keep all bolts tight. Check all bolts after 50 hours of operation and each season thereafter. Visually inspect all bolts daily.

FRAME LAYOUT FIGURE

STD-410

NOTE: ALL DIMENSIONS ARE IN INCHES.

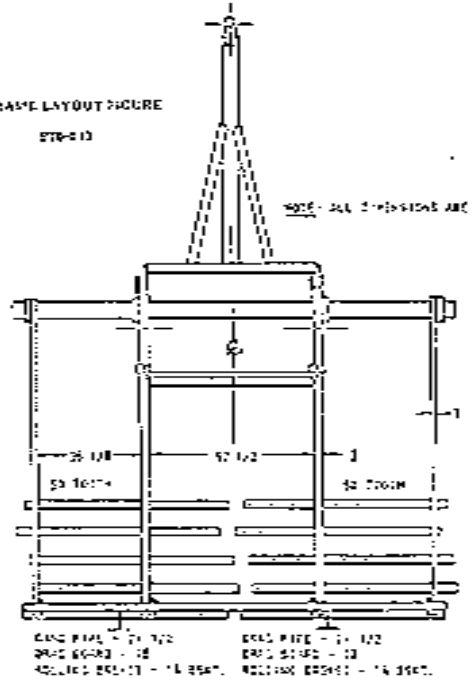

FRAME LAYOUT FIGURE

STD-411

NOTE: ALL DIMENSIONS ARE IN INCHES.

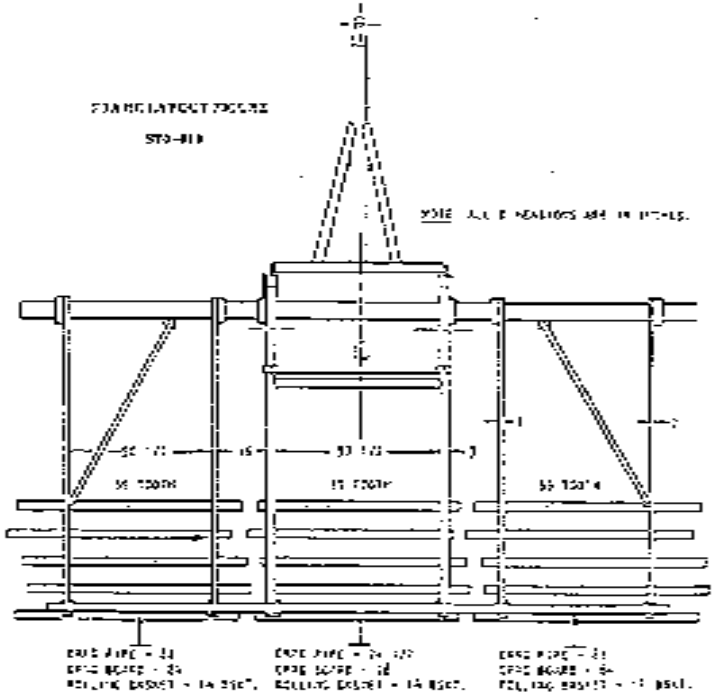

FRAME LAYOUT FIGURE

STD-412

NOTE: ALL DIMENSIONS ARE IN INCHES.

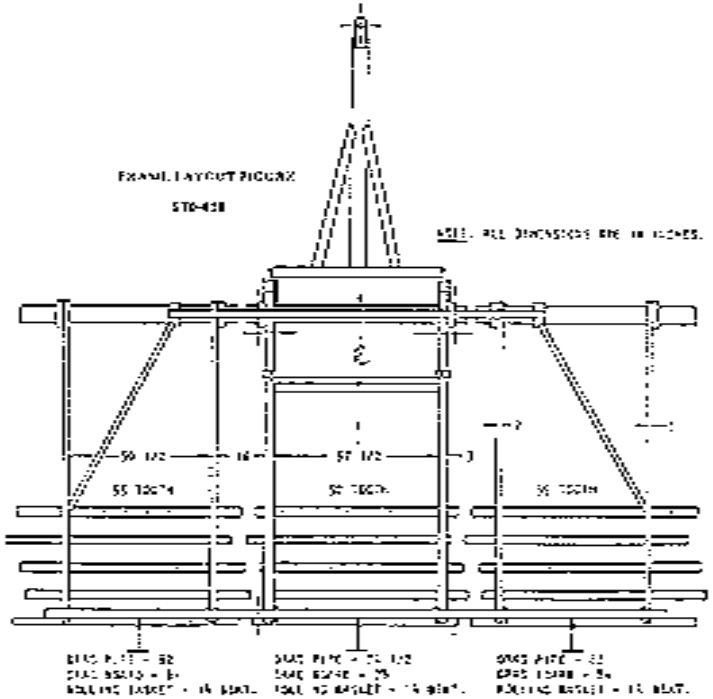

FRAME LAYOUT FIGURE

STD-413

NOTE: ALL DIMENSIONS ARE IN INCHES.

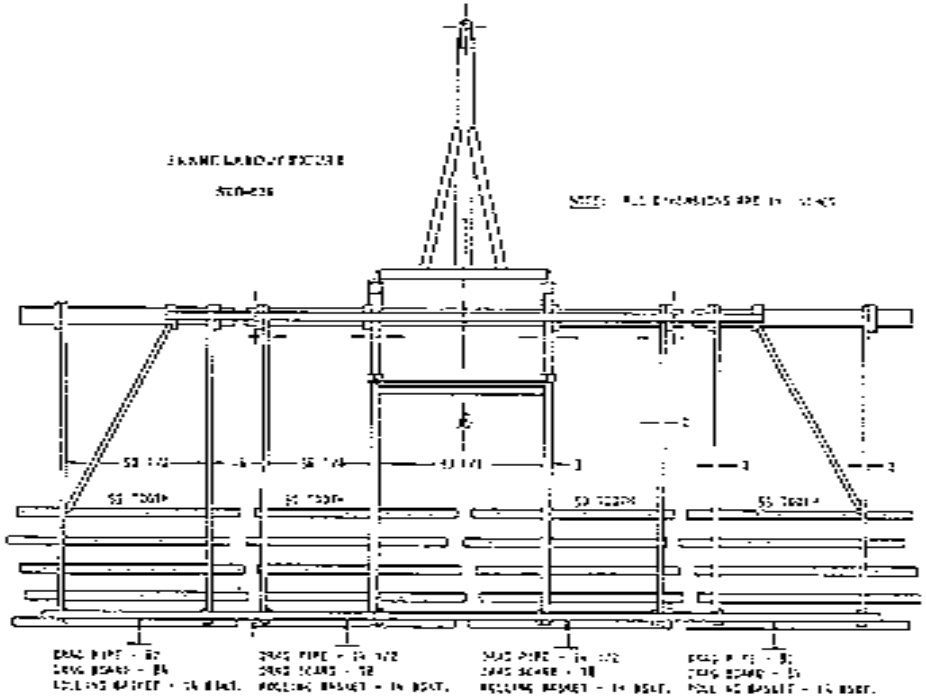

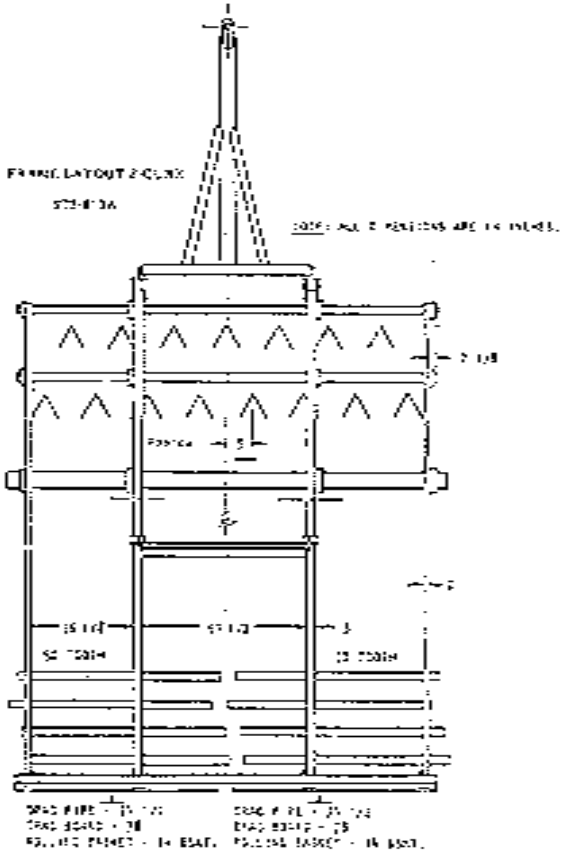

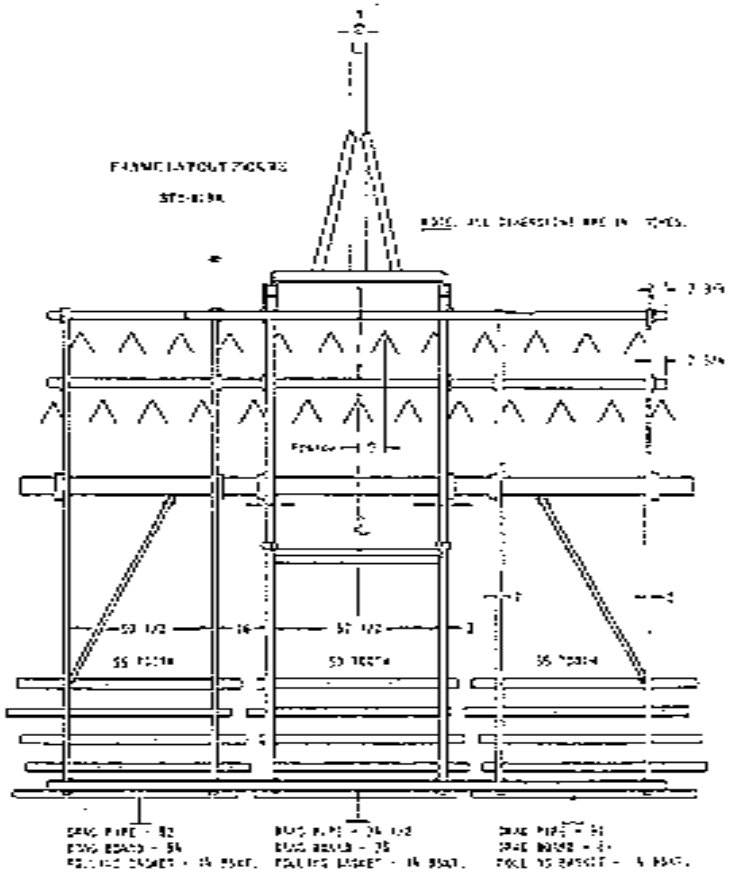

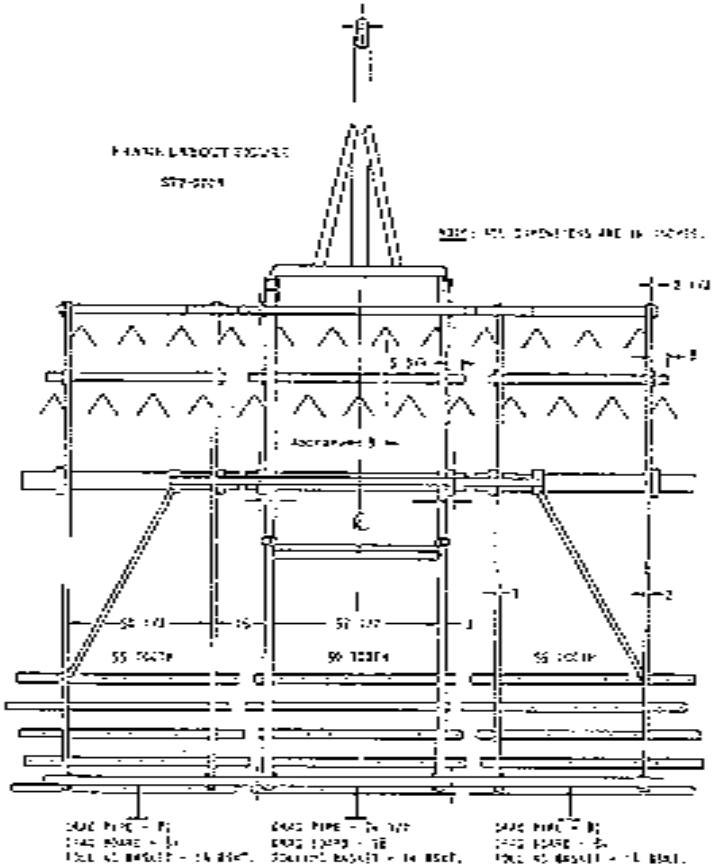

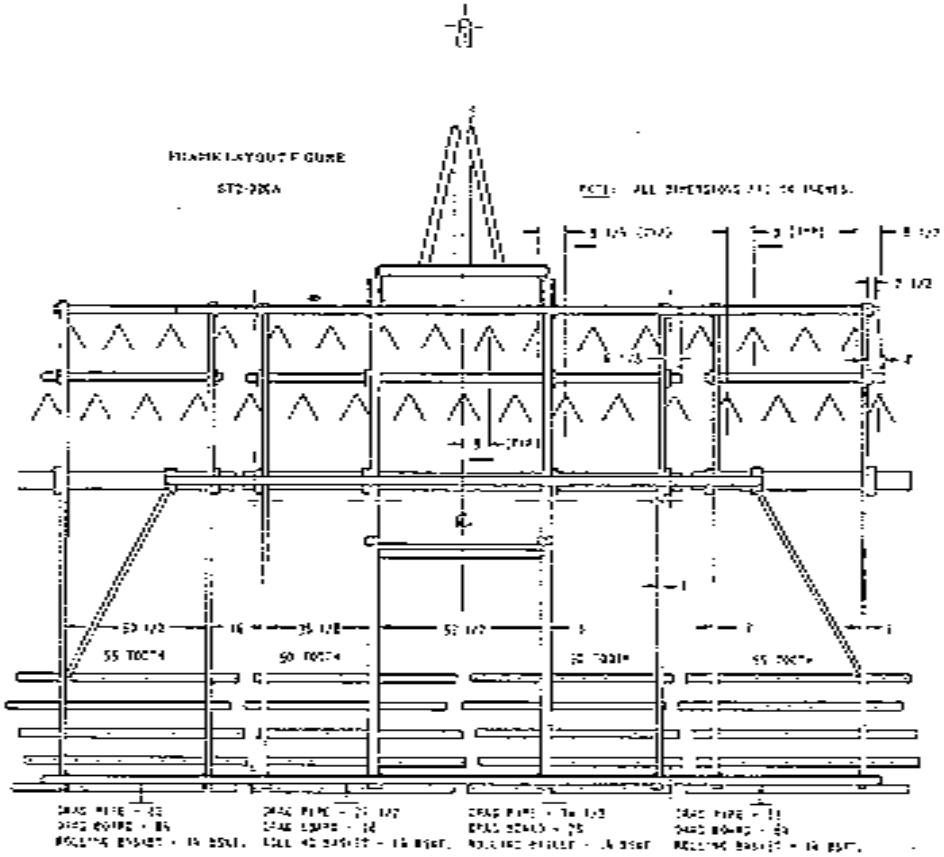

FRAME LAYOUT FIGURE

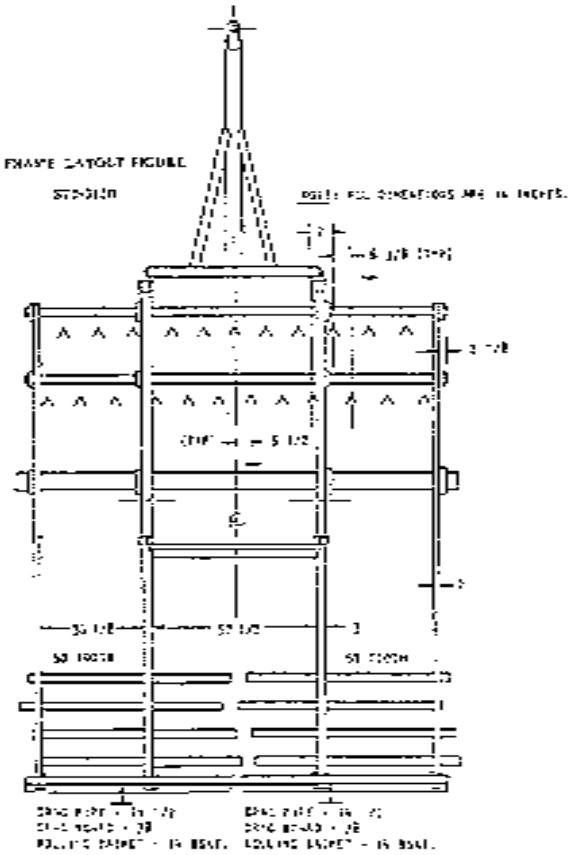

TRAILER LAYOUT FIGURE

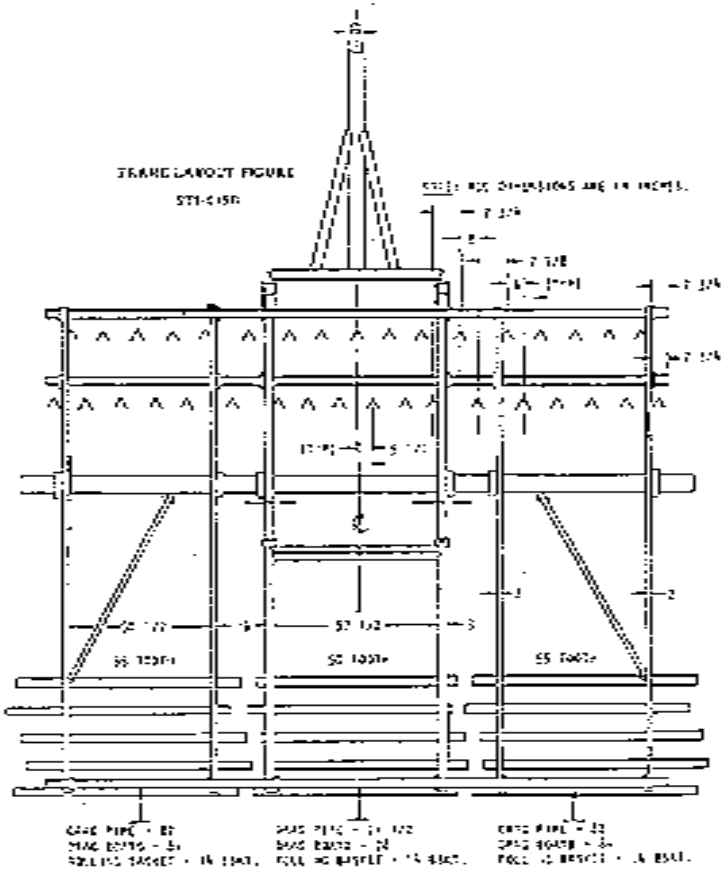

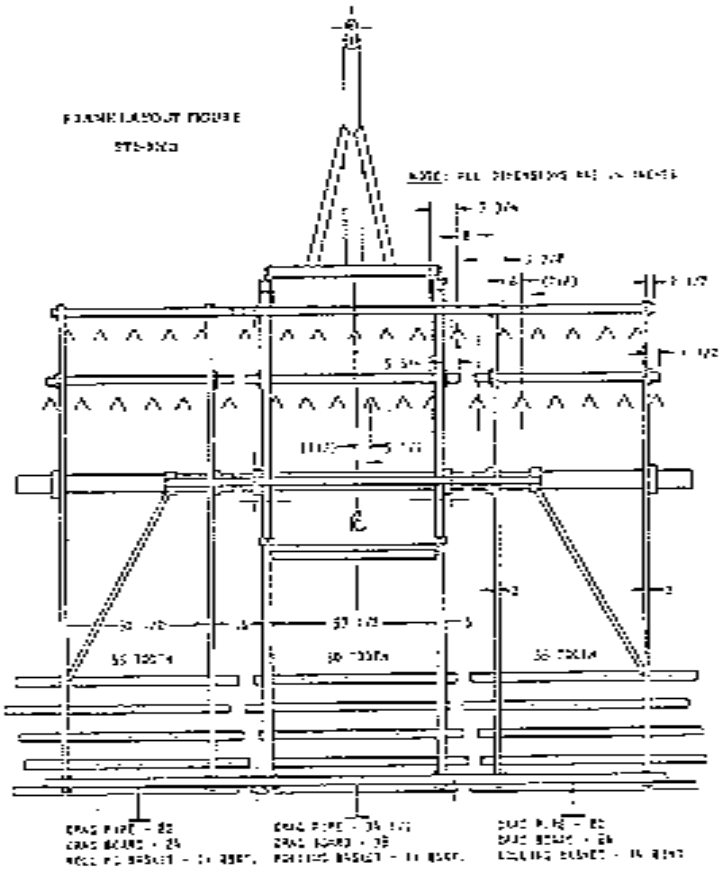

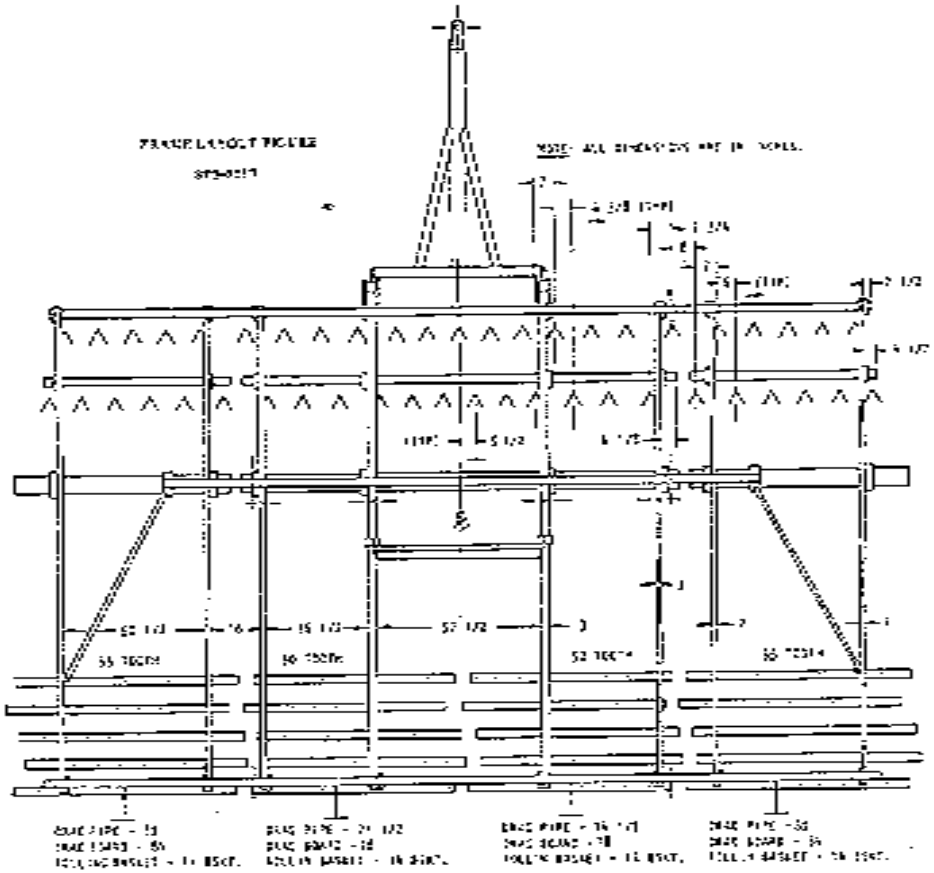

FRAME LAYOUT FIGURE

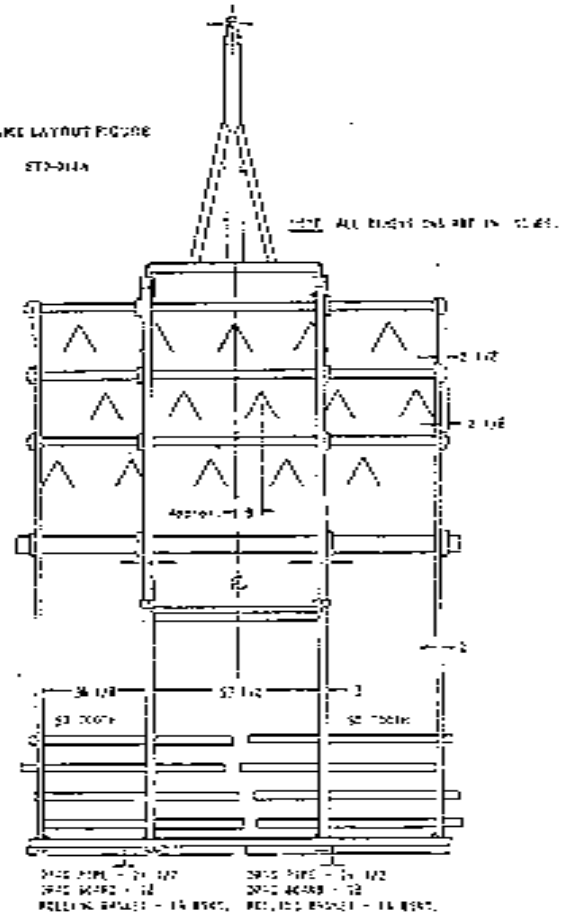

FRAME LAYOUT FIGURE

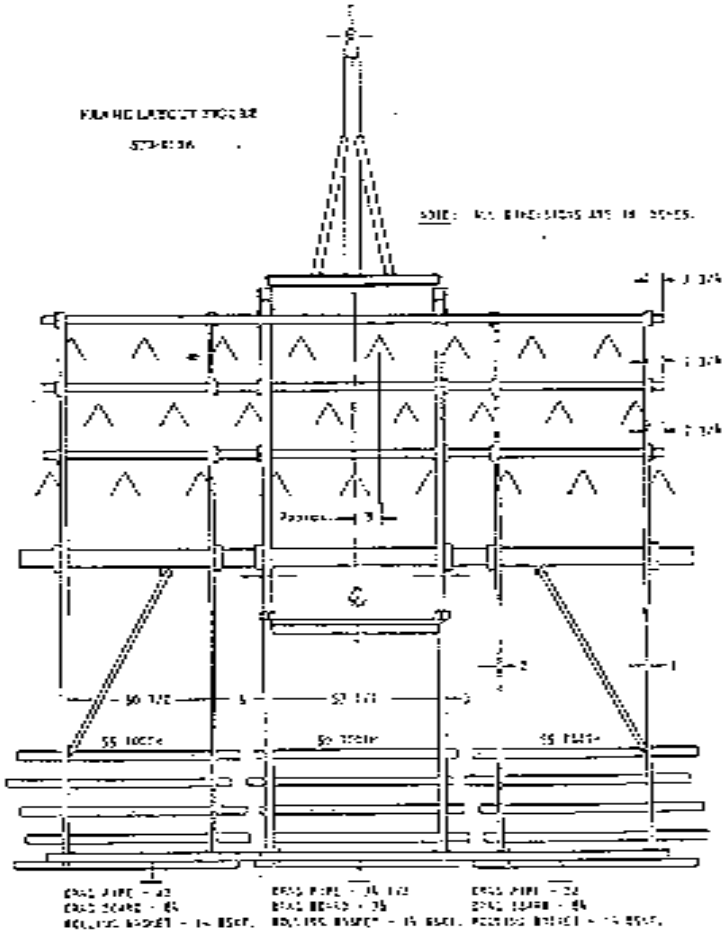

FRAME LAYOUT FIGURE

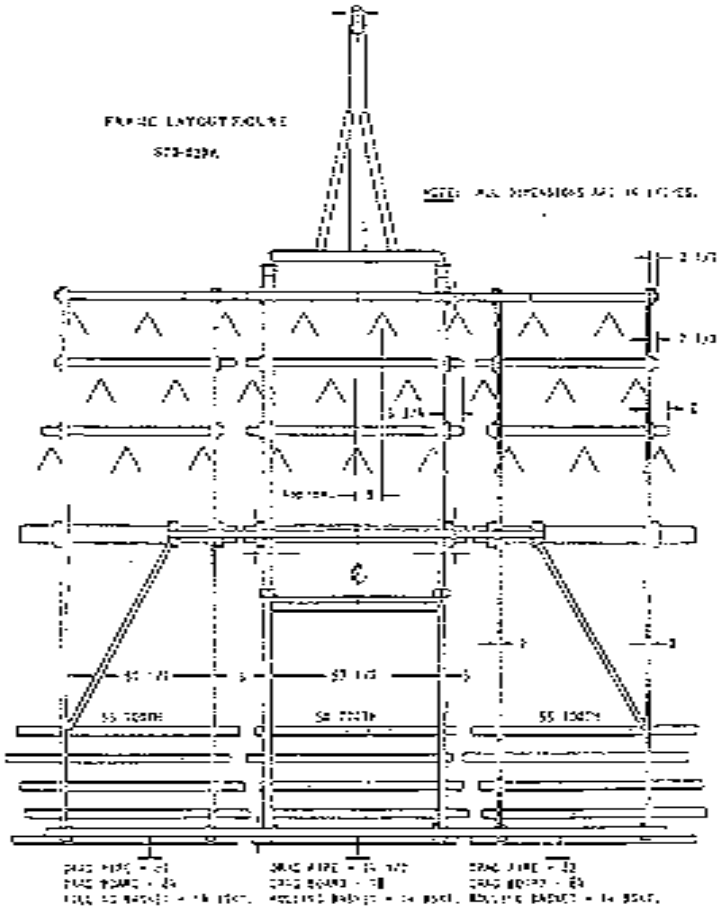

FRAME LAYOUT FIGURE

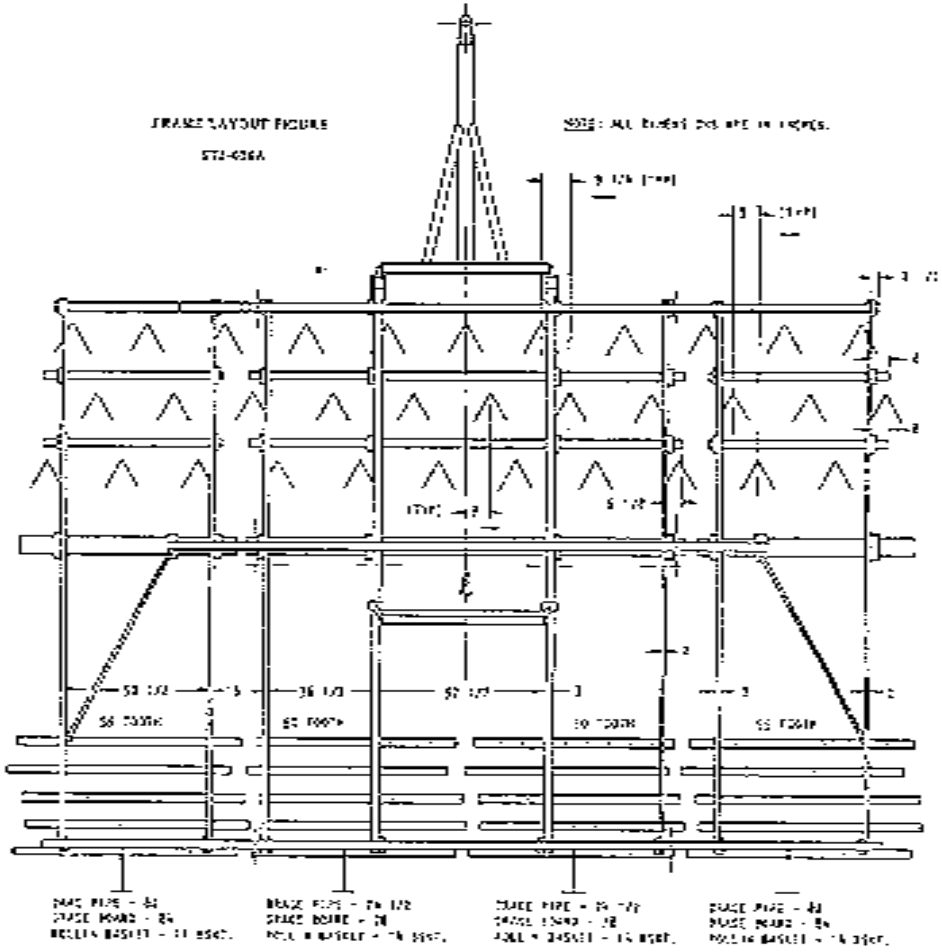

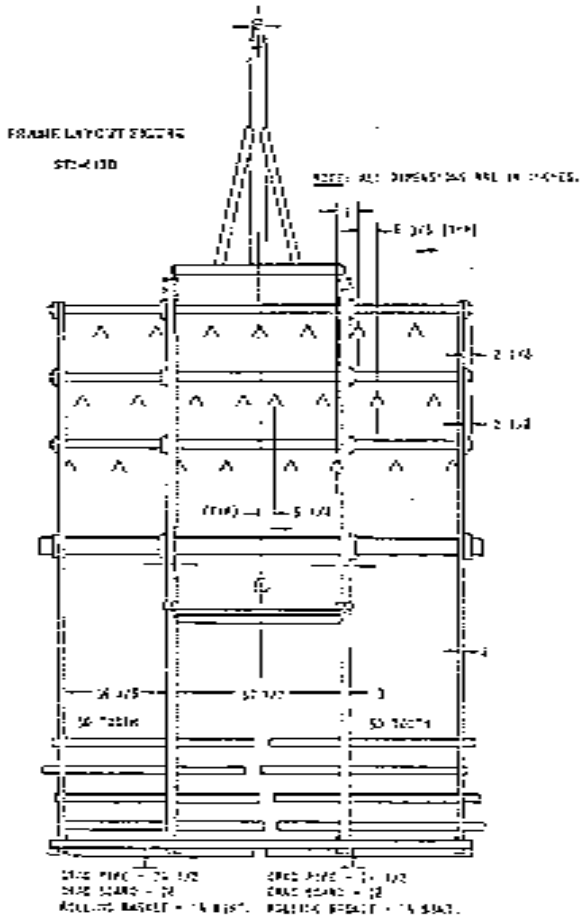

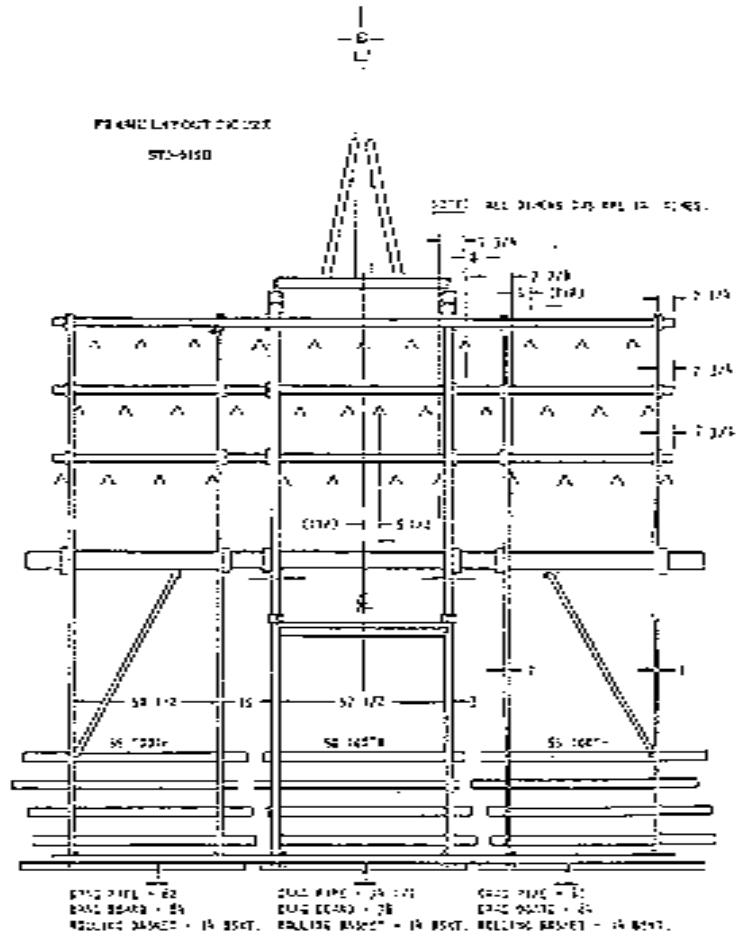

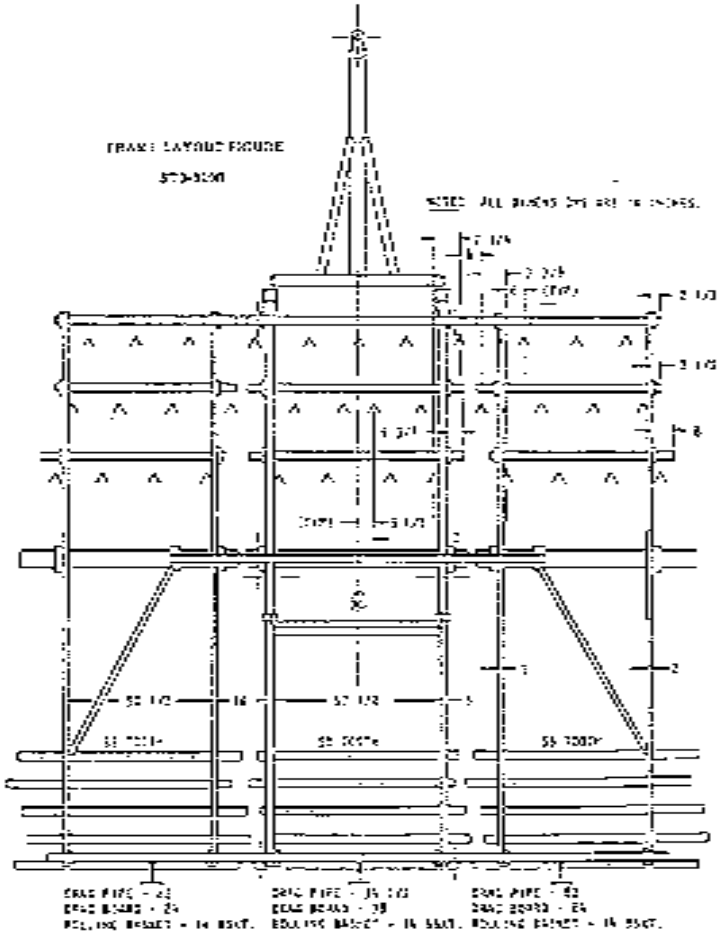

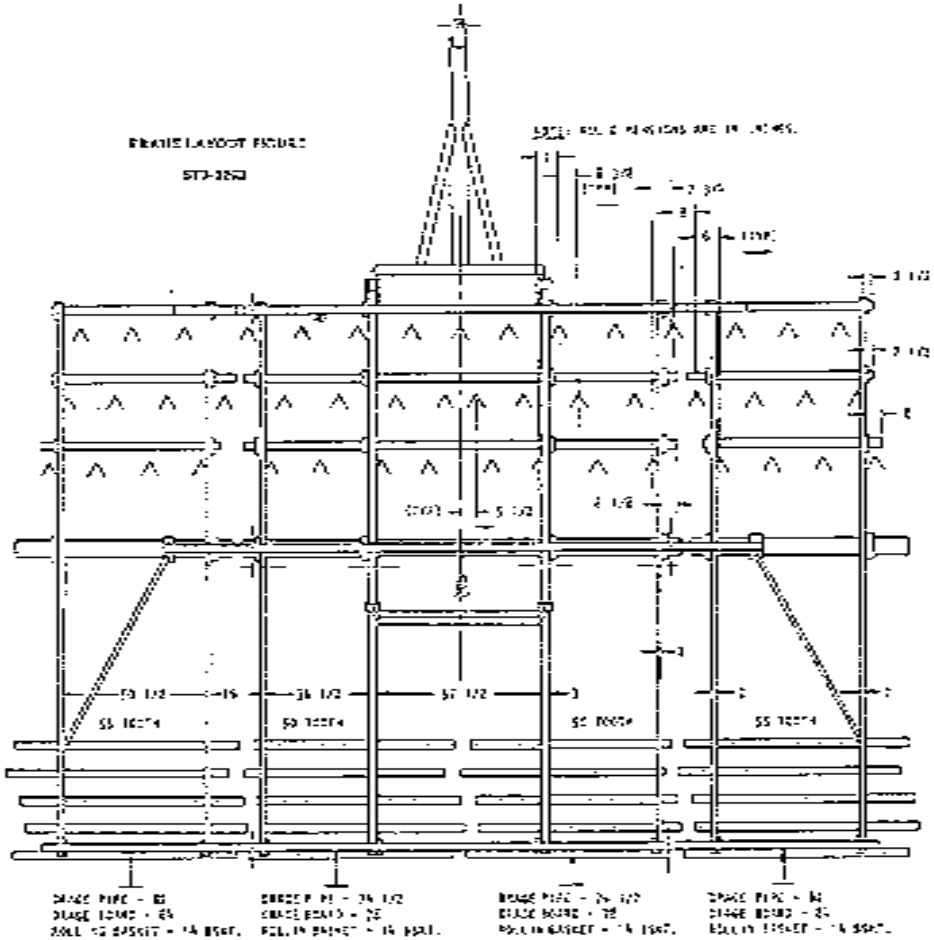

PARTS LISTS

AMCO SUPER-TILL PARTS LIST

PULL TONGUE

REF. NO.	PART NO.	DESCRIPTION	NO. REQ'D ST0-13'	ST0-19'	ST0-20'	ST0-26'	ST2-13'	ST2-19'	ST2-20'	ST2-26'	ST3-13'	ST3-19'	ST3-20'	ST3-26'
1	20384	Assembly Pull Tongue	1	1	1	1	1	1	1	1	1	1	1	1
2	100061	Hose Holder	1	1	1	1	1	1	1	1	1	1	1	1
3	10075	Cotter Pin	1	1	1	1	1	1	1	1	1	1	1	1
4	P6608	Tongue Jack	1	1	1	1	1	1	1	1	1	1	1	1
5	P6178	Ratchet Jack w/2 clevis pins & 4 hair pins.	1	1	1	1	1	1	1	1	1	1	1	1
6	P5112	Housing Assembly	1	1	1	1	1	1	1	1	1	1	1	1
7	P5103	Zerk	2	2	2	2	2	2	2	2	2	2	2	2
8	P5104	Rivet	1	1	1	1	1	1	1	1	1	1	1	1
9	P5105	Rivet	2	2	2	2	2	2	2	2	2	2	2	2
10	P5106	Spring	1	1	1	1	1	1	1	1	1	1	1	1
11	P5107	Pawl	1	1	1	1	1	1	1	1	1	1	1	1
12	P5108	Yoke Pin	2	2	2	2	2	2	2	2	2	2	2	2
13	P5109	Hairpin Clip	4	4	4	4	4	4	4	4	4	4	4	4
14	P5110	Handle	1	1	1	1	1	1	1	1	1	1	1	1
15	P5111	Rivet	1	1	1	1	1	1	1	1	1	1	1	1
16	100570	Pin 1 1/4 Dia. x 5 3/8 Long	2	2	2	2	2	2	2	2	2	2	2	2
17	10910	Roll Pin 5/16 x 2 1/4	4	4	4	4	4	4	4	4	4	4	4	4

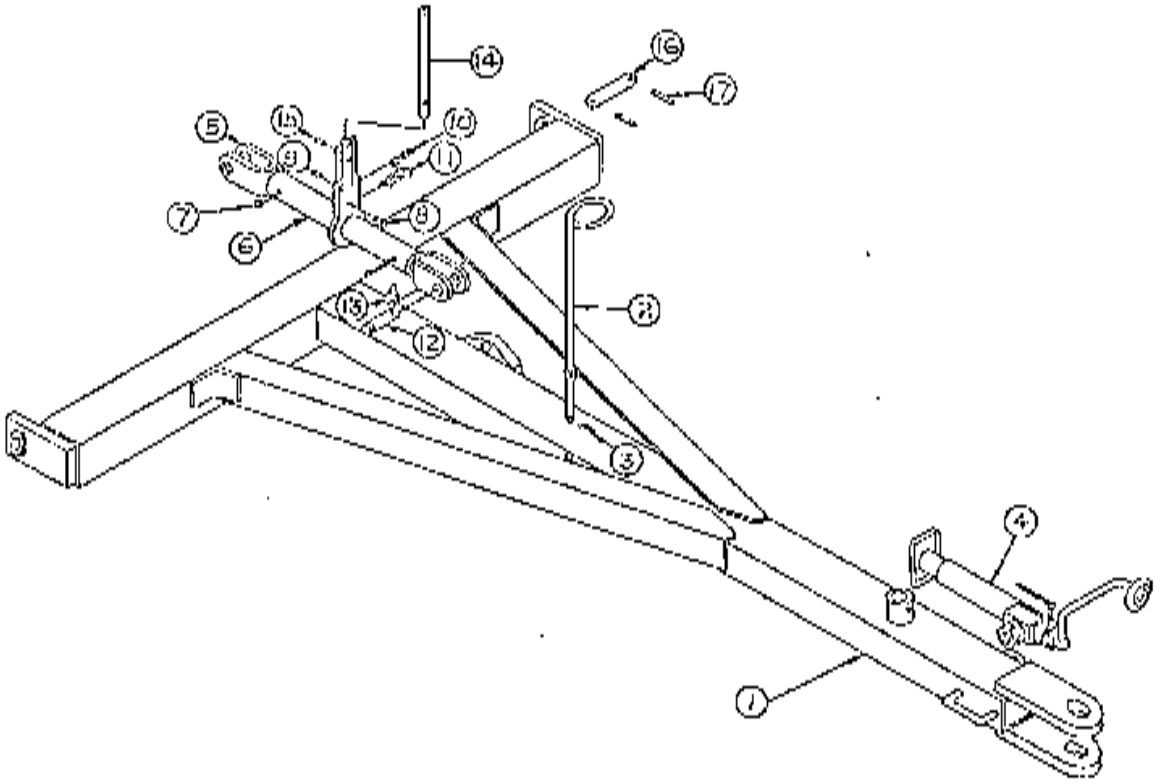

AMCO SUPER-TILL PARTS LIST

MAIN FRAME STO - 13', 19', 20'

REF. NO.	PART NO.	DESCRIPTION	NO. REQ'D STO-13'	STO-19'	STO-20'	STO-26'	ST2-13'	ST2-19'	ST2-20'	ST2-26'	ST3-13'	ST3-19'	ST3-20'	ST3-26'
1	20518	Assembly, Center Rail LH.....	1	1	1									
2	20519	Assembly, Center Rail RH.....	1	1	1									
5	20387	Assembly, Rockshaft - 2 Row.....	1	1	1									
7	9270	Bushing (Not shown).....	4	4	4									
8	10910	Roll Pin 5/16 x 2 1/4.....	2	2	2									
9	P1895	Hex Screw 3/8 x 3 1/4.....	2	2	2									
10	P2094	Lock Nut 3/8 NC, PLT, GRB.....	2	2	2									
11	0866	Assembly, Rockshaft Pivot Pin.....	2	2	2									
12	10232	Hex Nut 1 1/2 NC, SLOTTED.....	2	2	2									
13	20386	Assembly, Cylinder Mount (Butt).....	1	1	1									
14	67953	Clamp Plate 1/2 x 4 x 5 5/8.....	2	2	2									
15	10042	Hex Screw 5/8 x 6 NC, PLT, GR2.....	8	8	8									
16	P2069-1	Lock Nut 5/8 NC, PLT, GRB.....	8	8	8									
18	11081	Grease Fitting 5/16 Drive-In (Not shown)...	2	2	2									
19	67833	U Bolt 5/8 Dia. PLT.....	2	2	2									
20	P2069-1	Lock Nut 5/8 NC, PLT, GRB.....	4	4	4									
21	11280	U Bolt 7/8 Dia.....	2	2	2									
22	P2082-1	Lock Nut 7/8 NC, PLT, GRB.....	4	4	4									

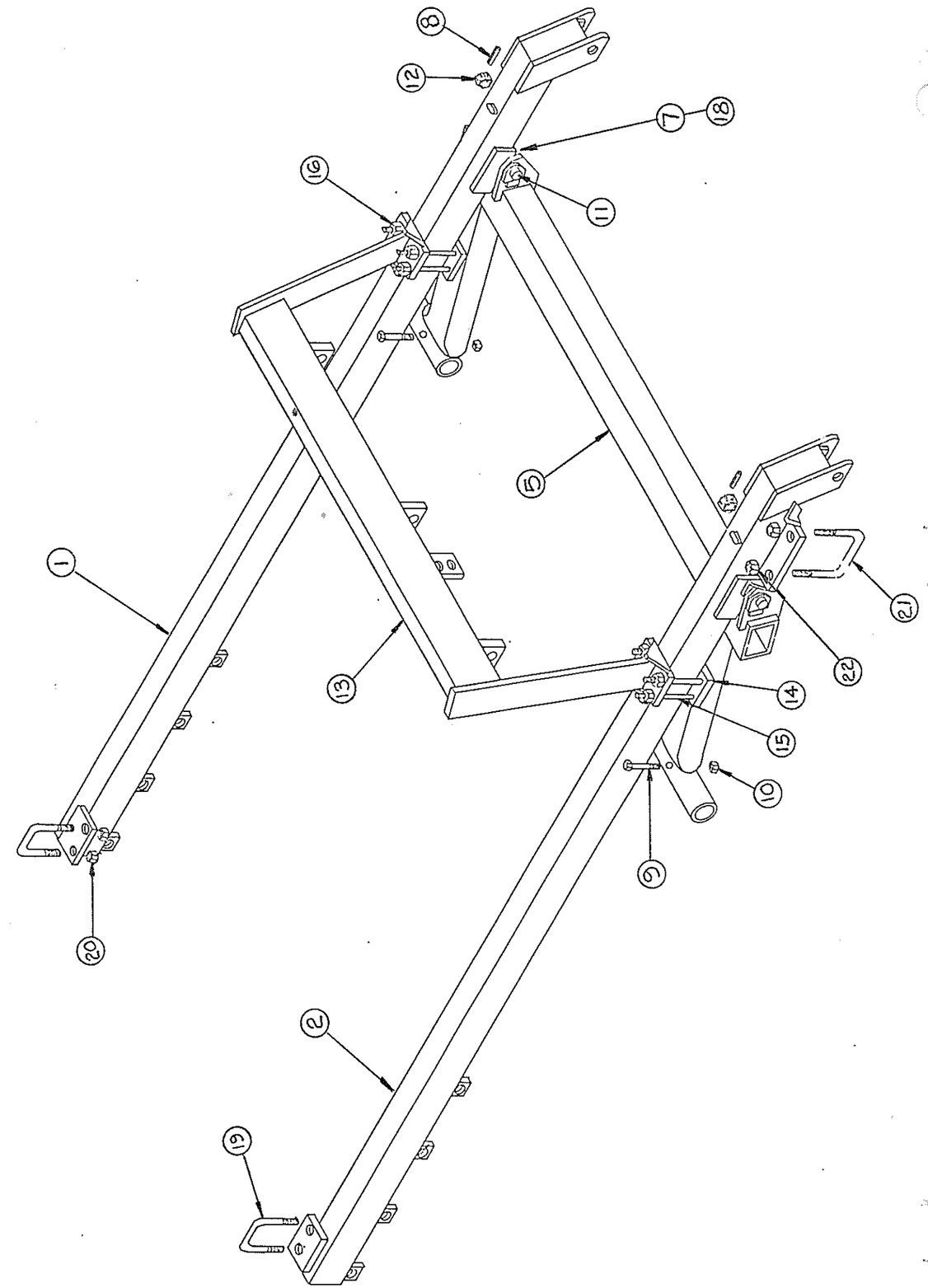

AMCO SUPER-TILL PARTS LIST

MAIN FRAME STO - 26'

REF. NO.	PART NO.	DESCRIPTION	NO. REQ'D STO-13'	STO-19'	STO-20'	STO-26'	ST2-13'	ST2-19'	ST2-20'	ST2-26'	ST3-13'	ST3-19'	ST3-20'	ST3-26'
1	20518	Assembly, Center Rail LH.....				1								
2	20519	Assembly, Center Rail RH.....				1								
3	20522	Assembly, Outer Center Frame Rail LH.....				1								
4	20523	Assembly, Outer Center Frame Rail RH.....				1								
5	20473	Assembly, Rockshaft - 4 Row.....				1								
7	9270	Bushing (Not shown).....				8								
8	10910	Roll Pin 5/16 x 2 1/4.....				4								
9	P1895	Hex Screw 3/8 x 3 1/4.....				4								
10	P2094	Lock Nut 3/8 NC, PLT, GRB.....				4								
11	0866	Assembly, Rockshaft Pivot Pin.....				4								
12	10232	Hex Nut 1 1/2 NC, SLOTTED.....				4								
13	20386	Assembly, Cylinder Mount (Butt).....				1								
14	67953	Clamp Plate 1/2 x 4 x 5 5/8.....				2								
15	10042	Hex Screw 5/8 x 6 NC, PLT, GR2.....				8								
16	P2069-1	Lock Nut 5/8 NC, PLT, GRB.....				8								
18	11081	Grease Fitting 5/16 Drive-In (Not shown)...				4								
19	67833	U Bolt 5/8 Dia. PLT.....				4								
20	P2069-1	Lock Nut 5/8 NC, PLT, GRB.....				8								
21	11280	U Bolt 7/8 Dia.....				4								
22	P2082-1	Lock Nut 7/8 NC, PLT, GRB.....				8								

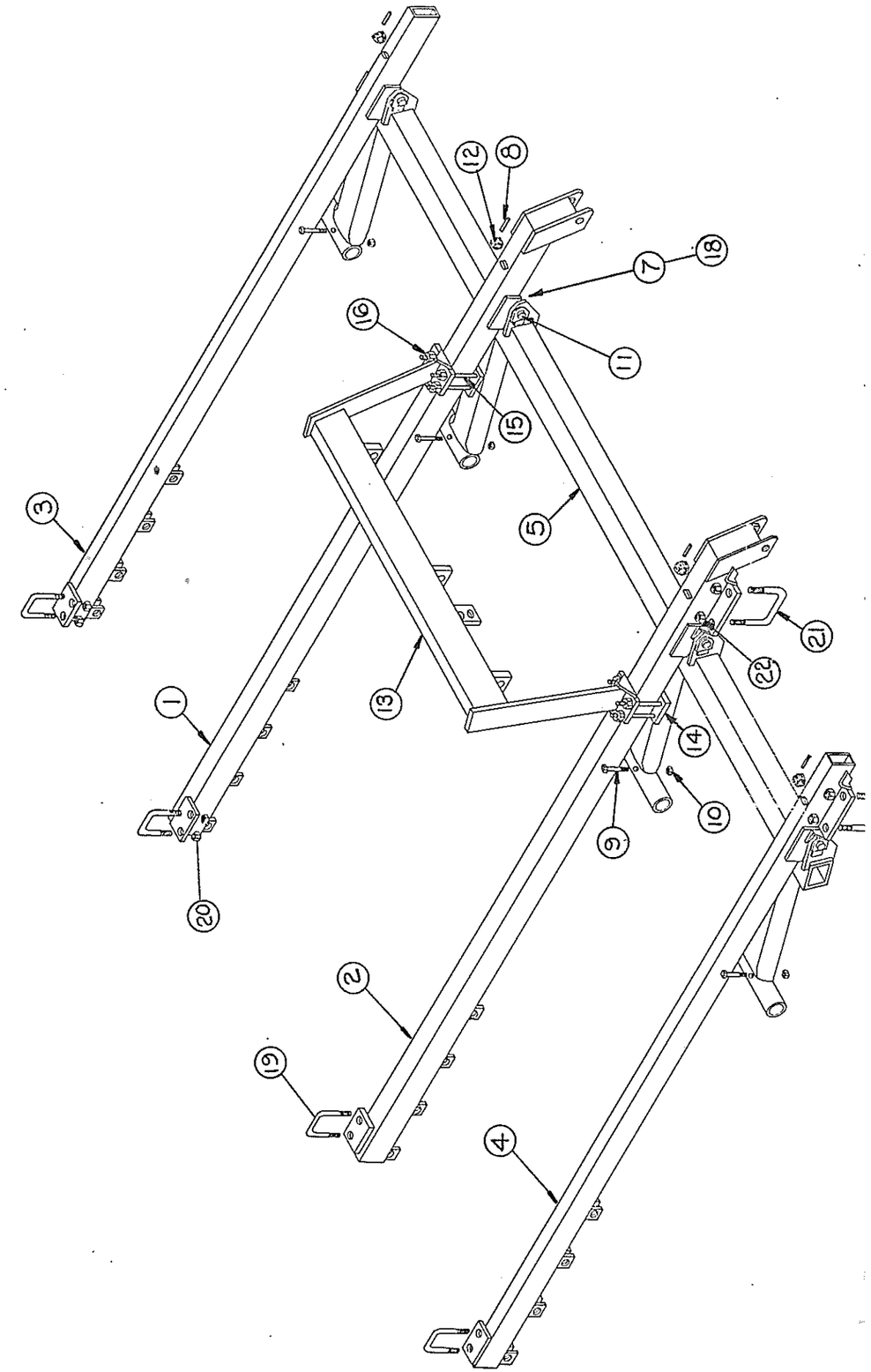

AMCO SUPER-TILL PARTS LIST

MAIN FRAME ST2 & 3 - 13', 19', 20'

REF. NO.	PART NO.	DESCRIPTION	NO. REQ'D ST0-13'	ST0-19'	ST0-20'	ST0-26'	ST2-13'	ST2-19'	ST2-20'	ST2-26'	ST3-13'	ST3-19'	ST3-20'	ST3-26'
1	20456	Assembly, Center Rail LH (Not shown).....					1	1	1					
2	20457	Assembly, Center Rail RH (Not shown).....					1	1	1					
1	20458	Assembly, Center Rail LH (Shown).....									1	1	1	
2	20459	Assembly, Center Rail RH (Shown).....									1	1	1	
5	20387	Assembly, Rockshaft - 2 Row.....					1	1	1		1	1	1	
6	20405	Assembly, Leveling Rod - 71 9/16".....					1	1	1					
6	20406	Assembly, Leveling Rod - 93 9/16".....									1	1	1	
7	9270	Bushing (Not shown).....					4	4	4		4	4	4	
8	10910	Roll Pin 5/16 x 2 1/4.....					4	4	4		4	4	4	
9	P1895	Hex Screw 3/8 x 3 1/4.....					2	2	2		2	2	2	
10	P2094	Lock Nut 3/8 NC, PLT, GRB.....					2	2	2		2	2	2	
11	0866	Assembly, Rockshaft Pivot Pin.....					2	2	2		2	2	2	
12	10232	Hex Nut 1 1/2 NC, SLOTTED.....					2	2	2		2	2	2	
13	20386	Assembly, Cylinder Mount (Butt).....					1	1	1		1	1	1	
14	67953	Clamp Plate 1/2 x 4 x 5 5/8.....					2	2	2		2	2	2	
15	10042	Hex Screw 5/8 x 6 NC, PLT, GR2.....					8	8	8		8	8	8	
16	P2069-1	Lock Nut 5/8 NC, PLT, GRB.....					8	8	8		8	8	8	
17	101414	Pin 1" Dia. 3 3/8 Long.....					1	1	1		1	1	1	
18	11081	Grease Fitting 5/16 Drive-In (Not shown)...					2	2	2		2	2	2	
19	67833	U Bolt 5/8 Dia. PLT.....					6	6	6		8	8	8	
20	P2069-1	Lock Nut 5/8 NC, PLT, GRB.....					12	12	12		16	16	16	
21	11280	U Bolt 7/8 Dia.....					2	2	2		2	2	2	
22	P2082-1	Lock Nut 7/8 NC, PLT, GRB.....					4	4	4		4	4	4	

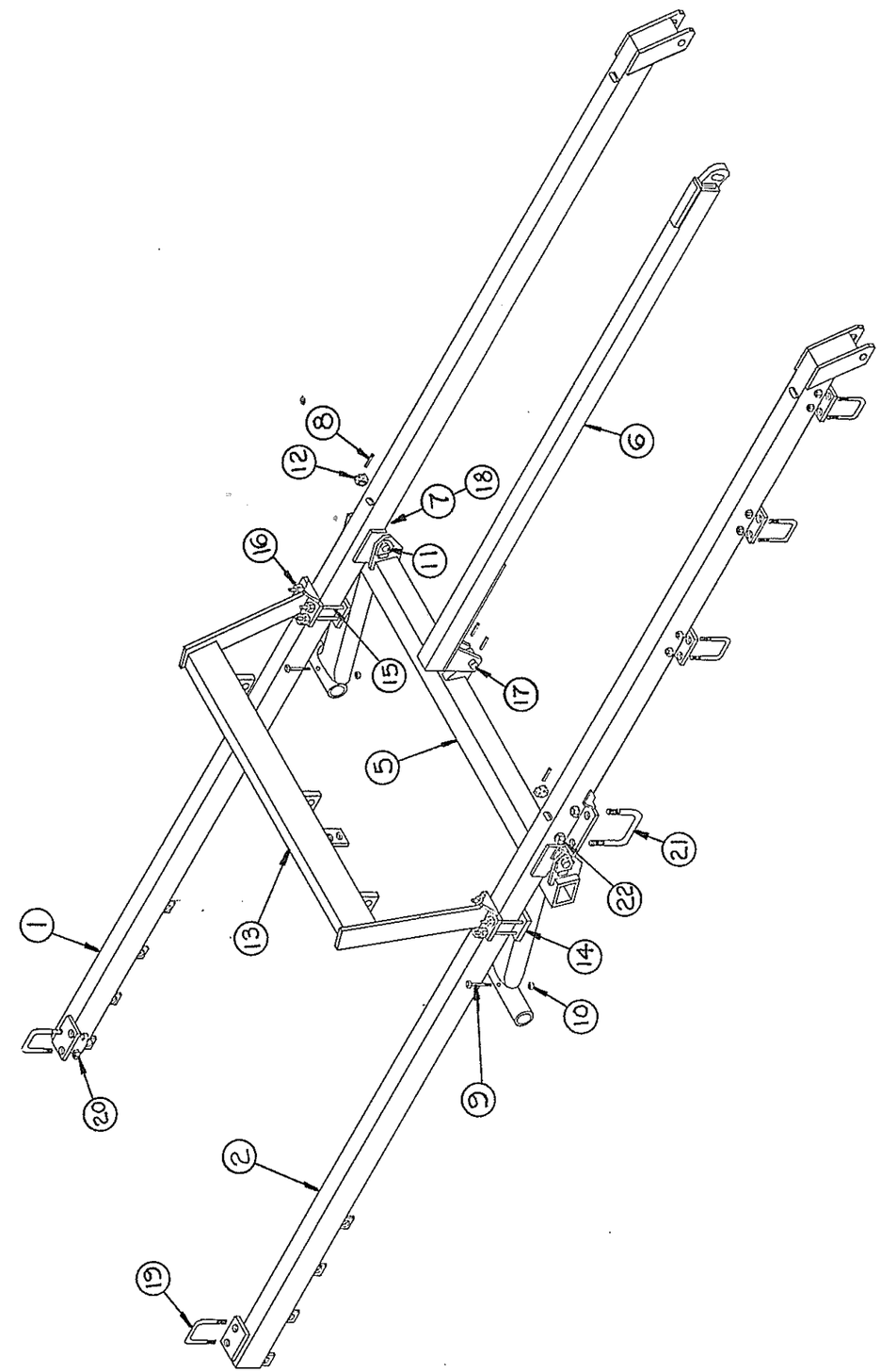

AMCO SUPER-TILL PARTS LIST

MAIN FRAME ST2 & 3 - 26'

REF. NO.	PART NO.	DESCRIPTION	NO. REQ'D ST0-13'	ST0-19'	ST0-20'	ST0-26'	ST2-13'	ST2-19'	ST2-20'	ST2-26'	ST3-13'	ST3-19'	ST3-20'	ST3-26'
1	20456	Assembly, Center Rail LH (Not shown).....								1				
2	20457	Assembly, Center Rail RH (Not shown).....								1				
1	20458	Assembly, Center Rail LH (Shown).....												1
2	20459	Assembly, Center Rail RH (Shown).....												1
3	20468	Assembly, Outer Center Frame Rail LH(Not shown)								1				
4	20469	Assembly, Outer Center Frame Rail RH(Not shown)								1				
3	20470	Assembly, Outer Center Frame Rail LH (Shown)												1
4	20471	Assembly, Outer Center Frame Rail RH (Shown)												1
5	20473	Assembly, Rockshaft - 4 Row.....								1				1
6	20405	Assembly, Leveling Rod - 71 9/16".....								1				
6	20406	Assembly, Leveling Rod - 93 9/16".....												1
7	9270	Bushing (Not shown).....								8				8
8	10910	Roll Pin 5/16 x 2 1/4.....								6				6
9	P1895	Hex Screw 3/8 x 3 1/4.....								4				4
10	P2094	Lock Nut 3/8 NC, PLT, GRB.....								4				4
11	0866	Assembly, Rockshaft Pivot Pin.....								4				4
12	10232	Hex Nut 1 1/2 NC, SLOTTED.....								4				4
13	20386	Assembly, Cylinder Mount (Butt).....								1				1
14	67953	Clamp Plate 1/2 x 4 x 5 5/8.....								2				2
15	10042	Hex Screw 5/8 x 6 NC, PLT, GR2.....								8				8
16	P2069-1	Lock Nut 5/8 NC, PLT, GRB.....								8				8
17	101414	Pin 1" Dia. 3 3/8 Long.....								1				1
18	11081	Grease Fitting 5/16 Drive-In (Not shown)...								4				4
19	67833	U Bolt 5/8 Dia. PLT.....								12				16
20	P2069-1	Lock Nut 5/8 NC, PLT, GRB.....								24				32
21	11280	U Bolt 7/8 Dia.....								4				4
22	P2082-1	Lock Nut 7/8 NC, PLT, GRB.....								8				8

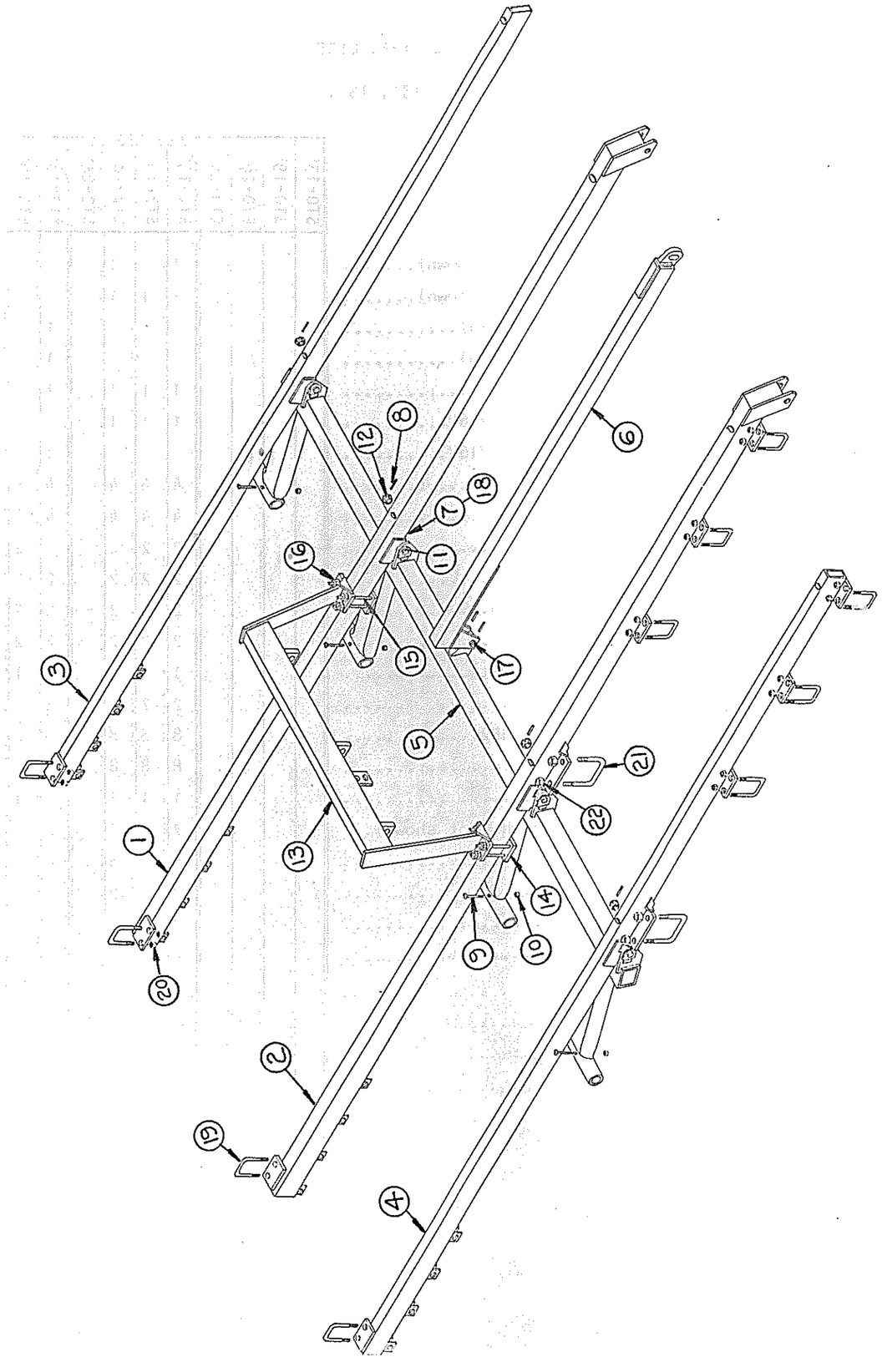

AMCO SUPER-TILL PARTS LIST

WING HINGES

REF. NO.	PART NO.	DESCRIPTION	NO. REQ'D ST0-13'	ST0-19'	ST0-20'	ST0-26'	ST2-13'	ST2-19'	ST2-20'	ST2-26'	ST3-13'	ST3-19'	ST3-20'	ST3-26'
1	20389	Assy. Wing Hinge (Large Slot).....							2	2				
1	20389	Assy. Wing Hinge (Small Slot).....			2	2							2	2
3	20421	Assy. Wing Hinge.....							2	2			2	2
4	20451	Assy. Wing Hinge.....			2	2			2	2			2	2
5	67833	U Bolt 5/8 Dia. PLT.....							2	2			2	2
6	P2069-1	Lock Nut 5/8 NC, PLT, GRB.....							4	4			4	4
7	11280	U Bolt 7/8 Dia.....			4	4			4	4			4	4
8	P2082-1	Lock Nut 7/8 NC, PLT, GRB.....			8	8			8	8			8	8
9	P2075-1	Lock Nut 1" NC, PLT, GRB.....			4	4			6	6			6	6
10	10253	Hex Screw 1 x 5 1/2 NC, PLT, GR2.....			2	2			4	4			4	4
11	10304	Hex Screw 1 x 6 1/2 NC, PLT, GR2.....			2	2			2	2			2	2
12	101270	Pin 1" (Cylinder Rod Mount).....			2	2			2	2			2	2
13	10879	Flat Washer 1" USS, PLT (Cyl. Rod Mt.).....			4	4			4	4			4	4
14	10910	Roll Pin 5/16 x 2 1/4 (Cyl. Rod Mt.).....			4	4			4	4			4	4

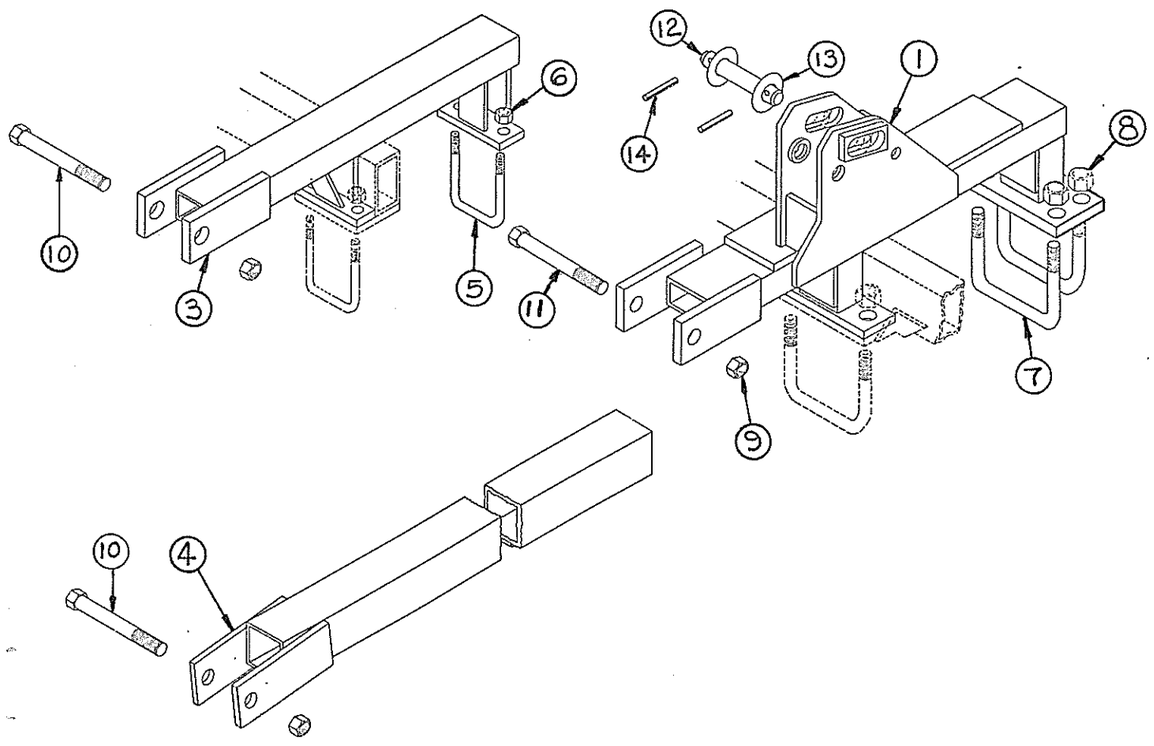

AMCO SUPER-TILL PARTS LIST

REF. NO.	PART NO.	DESCRIPTION	NO. REQ'D ST0-13'	ST0-19'	ST0-20'	ST0-26'	ST2-13'	ST2-19'	ST2-20'	ST2-26'	ST3-13'	ST3-19'	ST3-20'
1	20521	Wg. Frame Rail ILH,ORH (SHOWN).....	1	2	2	2							
1	20520	Wg. Frame Rail IRH,OLH (OPPOSITE).....	1	2	2	2							
2	20478	Wg. Frame Rail Outside RH (SHOWN).....						1	1	1			
2	20462	Wg. Frame Rail Outside LH (OPPOSITE).....						1	1	1			
3	20477	Wg. Frame Rail Inside RH (SHOWN).....					1	1	1	1			
3	20463	Wg. Frame Rail Inside LH (OPPOSITE).....					1	1	1	1			
4	20480	Wg. Frame Rail Outside RH (SHOWN).....										1	1
4	20464	Wg. Frame Rail Outside LH (OPPOSITE).....										1	1
5	20479	Wg. Frame Rail Inside RH (SHOWN).....									1	1	1
5	20465	Wg. Frame Rail Inside LH (OPPOSITE).....									1	1	1
6	102205	Tie Strap		2	2	2		2	2	2		2	2
7	11692	Hex Screw 7/8 x 2 NC,PLT,GR5.....		4	2	2		4	2	2		4	2
8	P2082-1	Lock Nut 7/8 NC,PLT,GRB.....	4	12	10	10	4	12	10	10	4	12	10
9	11280	U Bolt 7/8 Dia.....	2	4	4	4	2	4	4	4	2	4	4
10	67833	U Bolt 5/8 Dia.....	2	4	4	4	6	12	12	12	8	16	16
11	P2069-1	Lock Nut 5/8 NC,PLT,GRB.....	4	8	8	8	12	24	24	24	16	32	32

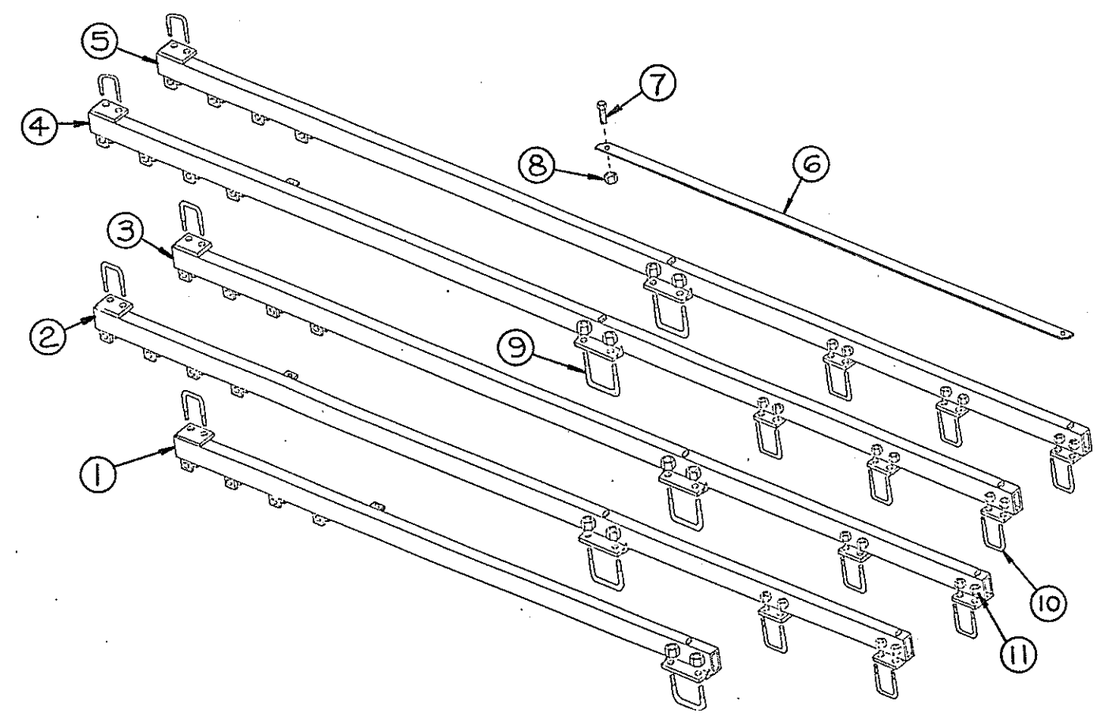

AMCO SUPER-TILL PARTS LIST

CENTER SECTION HINGES

REF. NO.	PART NO.	DESCRIPTION	NO. REQ'D ST0-13'	ST0-19'	ST0-20'	ST0-26'	ST2-13'	ST2-19'	ST2-20'	ST2-26'	ST3-13'	ST3-19'	ST3-20'	ST3-26'
1	20481	Assy. Front Frame Member	1	1										
2	20425	Assy. Inside Front Hinge								1				1
3	20424	Assy. Inside Front Hinge					1	1	1		1	1	1	
4	20397	Assy. Inside Hinge 6 Row			1				1				1	
5	20398	Assy. Inside Hinge 8 Row				1				1				1
6	11081	Grease Fitting 5/16 Drive-In					1	1	1	1	1	1	1	1
7	20445	Assy. Inside Rear Hinge 67 1/2"			1				1				1	
7	20446	Assy. Inside Rear Hinge 143 3/4"				1				1				1
8	67833	U Bolt 5/8 Dia. PLT					2	2	2	2	2	2	2	2
9	P2069-1	Lock Nut 5/8 NC, PLT, GRB					4	4	4	4	4	4	4	4
10	6513	U Bolt 3/4 Dia	2	2	2	4			2	4			2	4
11	P2098-1	Lock Nut 3/4 NC, PLT, GRB	4	4	4	8	2	2	6	10	2	2	6	10
12	20229	Assy. Cylinder Mount			2	2			2	2			2	2
13	10149	Hex Nut 1 1/4" NC			4	4			4	4			4	4
14	102135	Leveling Rod Cap					1	1	1	1				
15	20426	Assy. Leveling Rod Cap									1	1	1	1

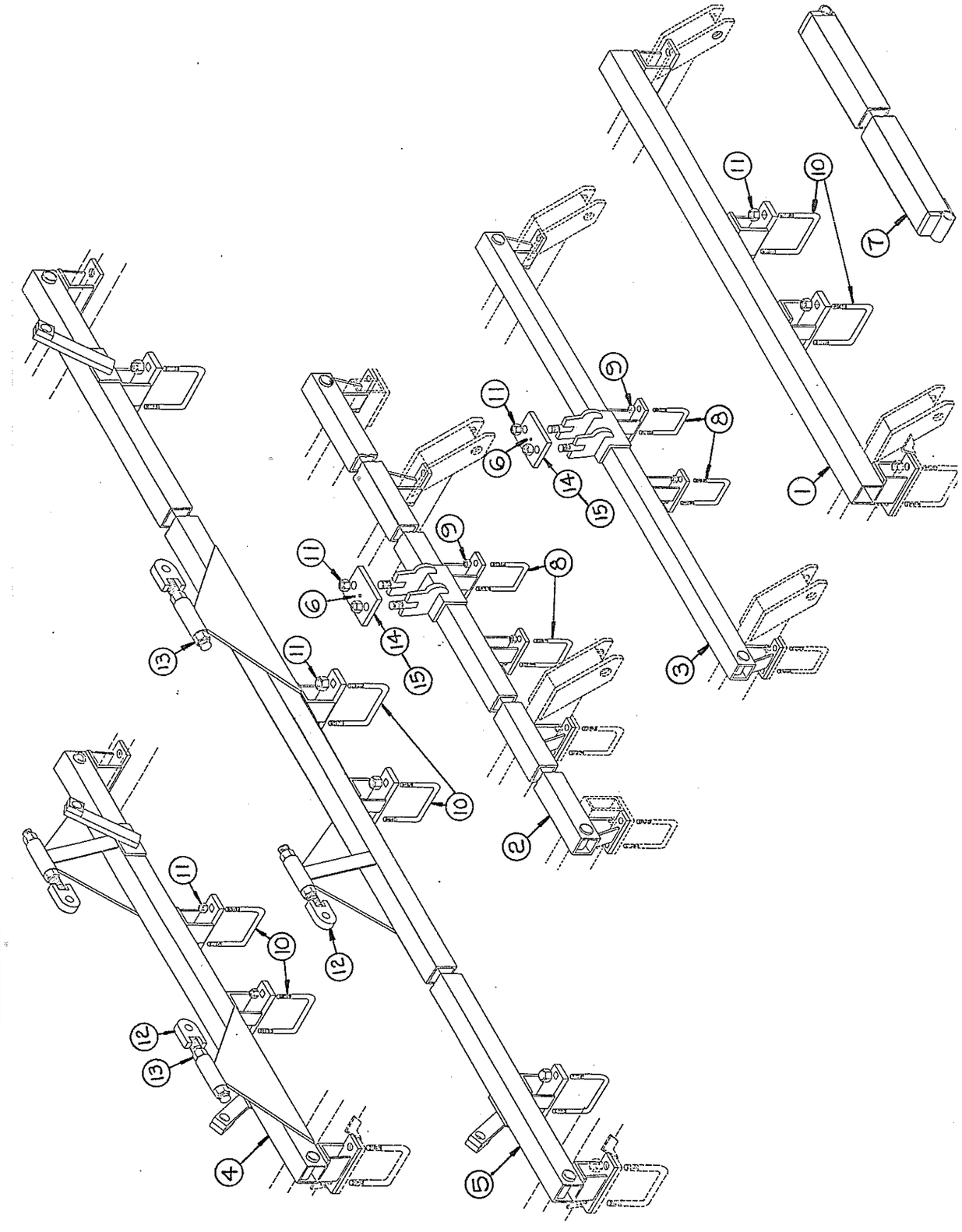

AMCO SUPER-TILL PARTS LIST

WING LOCKS

REF. NO.	PART NO.	DESCRIPTION	NO. REQ'D STC-13'	STC-19'	STC-26'	STC-26'	ST2-13'	ST2-19'	ST2-26'	ST2-26'	ST3-13'	ST3-19'	ST3-26'	ST3-26'
1	102138	Wing Lock LH 58 1/2"							1	1				
1	102139	Wing Lock RH 63 3/4"							1	1				
1	102140	Wing Lock LH 82"											1	1
1	102141	Wing Lock RH 87 1/4"											1	1
2	20427	Assembly, Front Lock Stand							2	2			2	2
3	20396	Assembly, Wing Lock Guide							2	2			2	2
4	102070	Clamp Plate							2	2			2	2
5	10910	Roll Pin							2	2			2	2
6	11541	Hair Pin Clip							2	2			2	2
7	10042	Hex Screw 5/8 x 6 NC, PLT, GR2							4	4			4	4
8	100002A	U Bolt 5/8							2	2			2	2
9	P2069-1	Lock Nut 5/8 NC, PLT, GR8							8	8			8	8
10	100683	Lock Pin 3/4"			2	2								
11	10317	Kilk Pin			2	2								

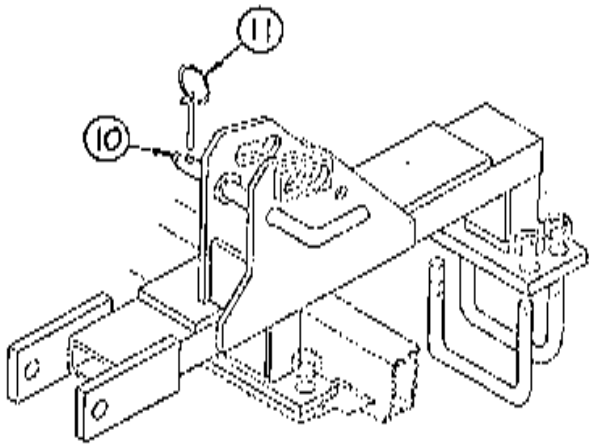

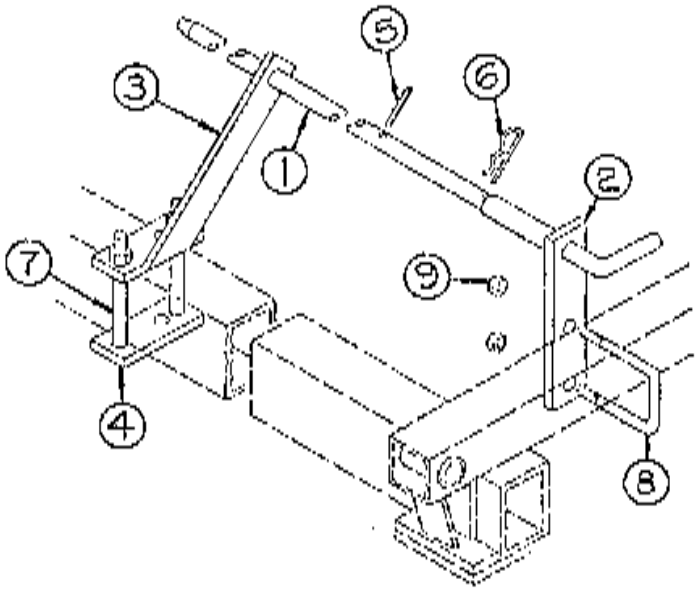

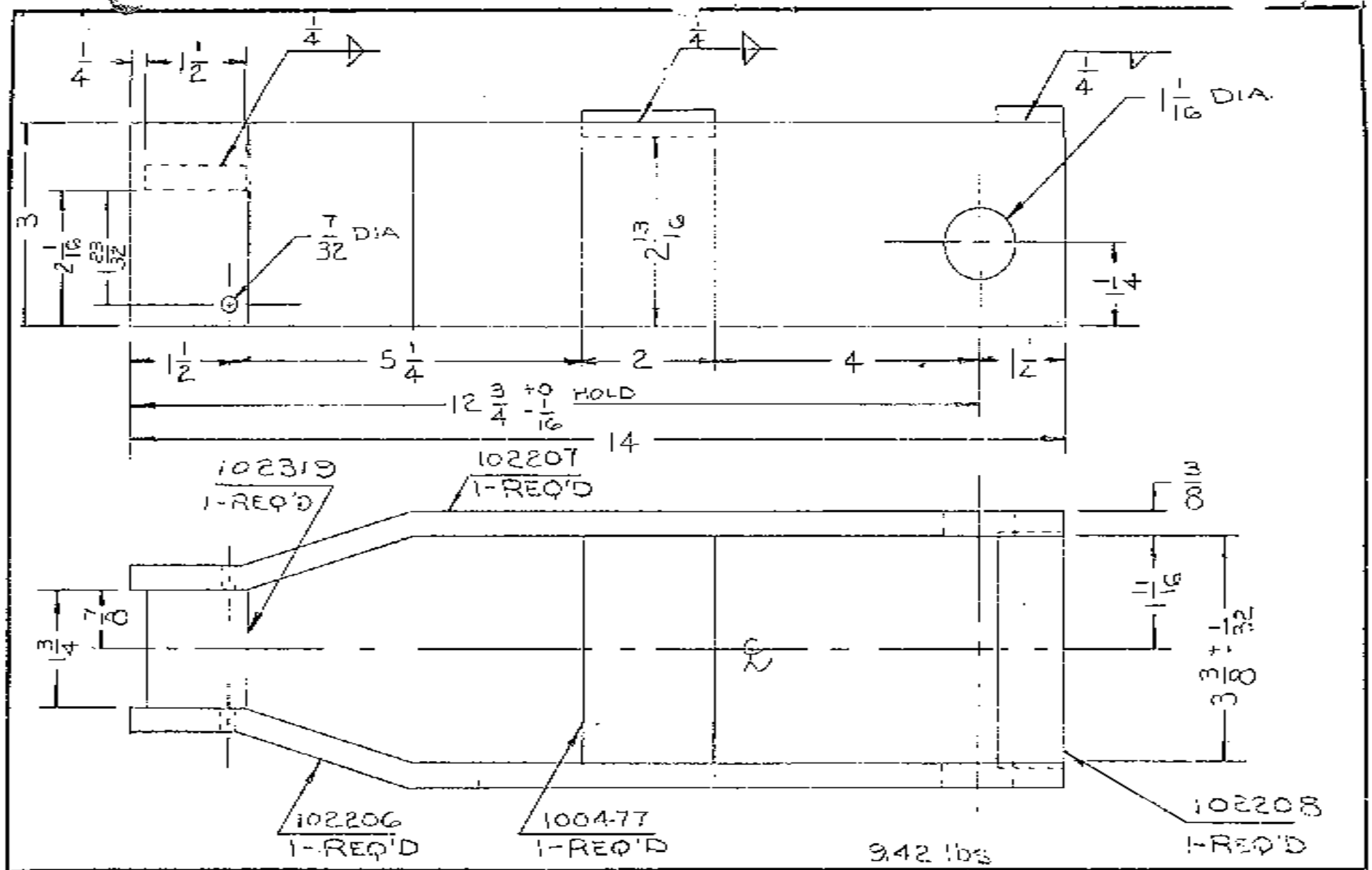

REV.		DWG. NO. 20517	MATERIAL WELDMENT	Amco Division Dynamics Corporation of America Yazoo City, Mississippi 39194
REV.		DRAWN BY THH / SCALE 1/2	SUPER-TILL ST 253 13' STO 13', 19', 20' & 26'	PART NAME ASSY. TRANSPORT LOCK (FOR 4 x 8 CYL.)
REV.		DATE 5/1986 / APPV'D BY		

Dietzgen N.O. 1984 "Agapcoat"

20476

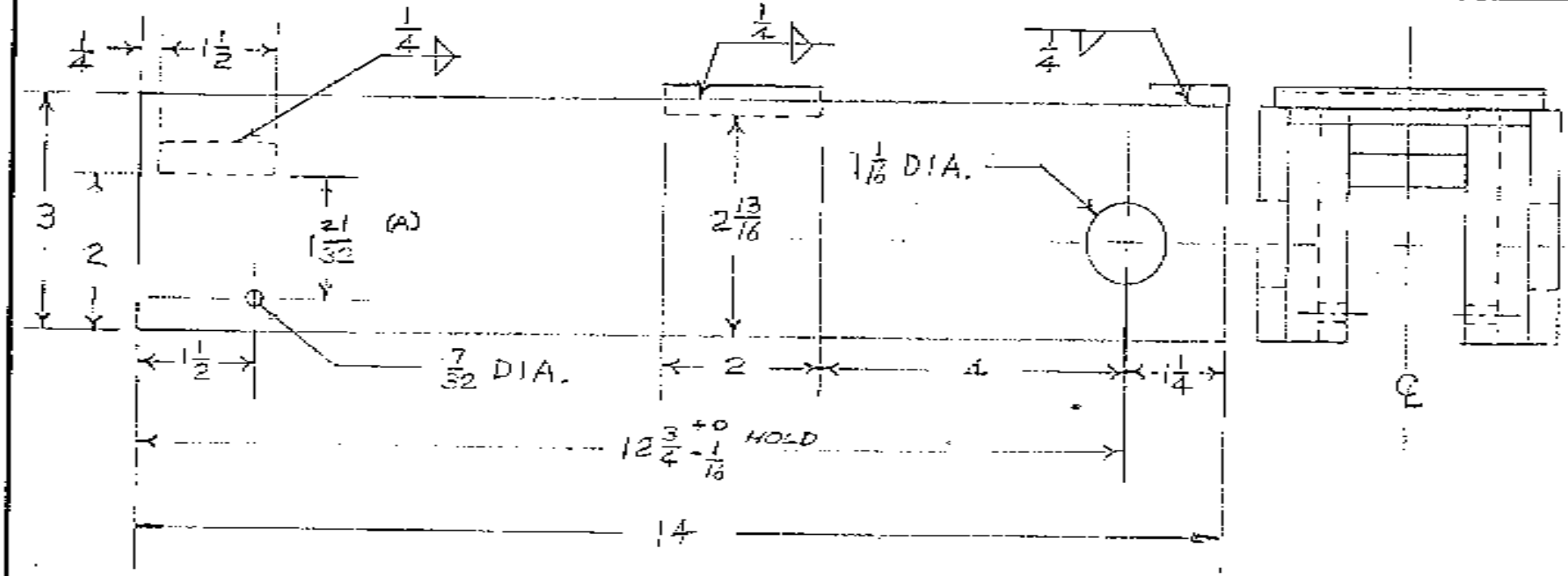

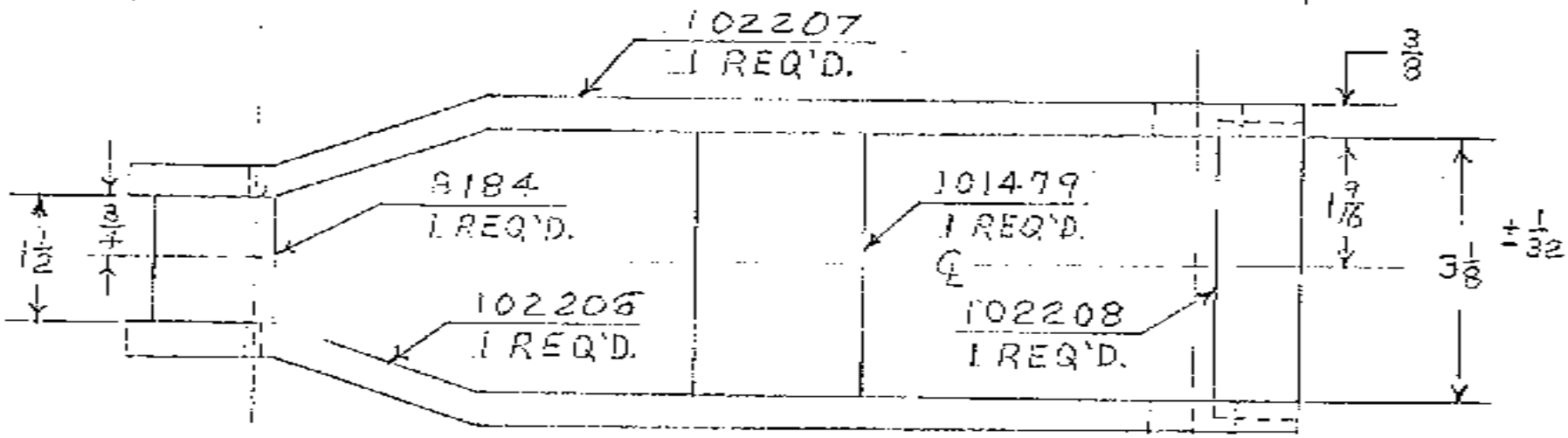

10 LBS.

REV.	(A) WAS 1 19/32 5/1986	DWG. NO. 20476		MATERIAL WELDMENT	AMCO INTERNATIONAL YAZOO CITY, MISSISSIPPI, U.S.A. A Degussa Division of DYNAMITE NOBEL OF AMERICA
REV.		DRAWN BY D.W.E.	SCALE 1/2		
REV.		DATE 7-31-85	APPV'D BY D.P.S.	STRS 3-19, 20 & 26 SUPER TILL	PART NAME (FOR 5X8 CYL) ASSY. TRANSPORT LOCK

Dieterich N. O. 1984 "Revised"

AMCO SUPER-TILL PARTS LIST

ROCKSHAFT CYLINDER MOUNT AND RATCHET JACK MOUNT

REF. NO.	PART NO.	DESCRIPTION	NO. REQ'D ST0-13'	ST0-19'	ST0-20'	ST0-25'	ST2-13'	ST2-19'	ST2-20'	ST2-25'	ST3-13'	ST3-19'	ST3-20'	ST3-25'
1	20385	Assy. Cylinder Mount (For 4 x 4 Tube).....	1	1	1	1	1	2	2	2	1	2	2	2
2	11756	U Bolt 7/8" Dia.....	2	2	2	2	2	4	4	4	2	4	4	4
3	P2082-1	Lock Nut 7/8" NC,PLT,GRB.....	4	4	4	4	4	8	8	8	4	8	8	8
4	11492	Bushing - Split Steel.....	1	1	1	1	1	2	2	2	1	2	2	2
5	20399	Assy. Ratchet Mount (For 3 x 3 Tube).....	1	1	1	1	1	1	1	1	1	1	1	1
6	67833	U Bolt 5/8" Dia. PLT.....	2	2	2	2	2	2	2	2	2	2	2	2
7	P2069-1	Lock Nut 5/8" NC,PLT,GRB.....	4	4	4	4	4	4	4	4	4	4	4	4

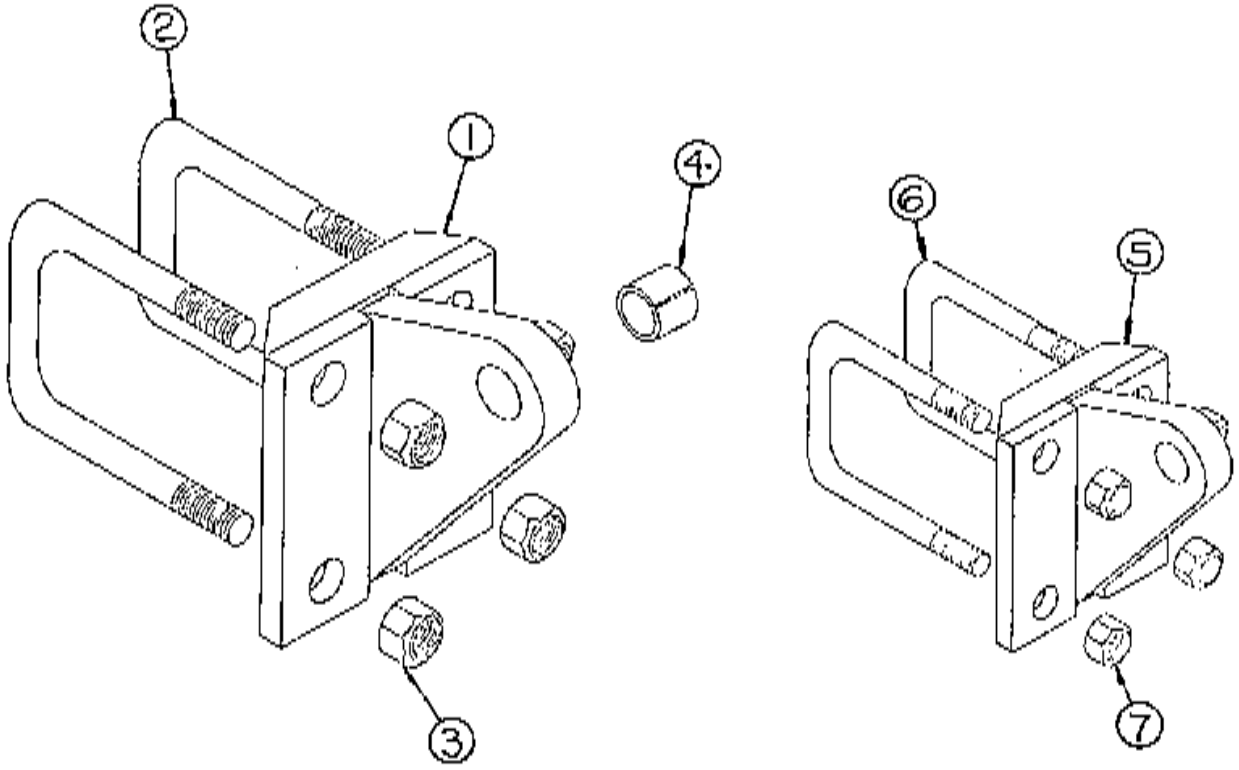

AMCO SUPER-TILL PARTS LIST

HYDRAULIC CYLINDER 3 x 24

REF. NO.	PART NO.	DESCRIPTION (MANUFACTURER'S NO.)	NO. REQ'D
1	11730	Piston Rod (010700018)	1
2	11729	Tube (051500014)	1
3	P6843	Butt (141500043)	1
4	P6844	Gland (081500227)	1
5	11557	Piston (071500003)	1
6	10986	Lock Nut 3/4-16 (220000208)	1
7	10987	Clevis Assembly (100000018)	1
8	11731	Tie Rod (170201281)	4
	P6301	Seal Repair Kit (PMCK-9200)	
*9	11559	O-Ring (240001334)	2
*10	10990	O-Ring (240000334)	1
*11	10991	BU-Washer (240005334)	2
*12	10989	O-Ring (240000018)	1
*13	11560	O-Ring (240000220)	1
*14	10993	BU-Washer (240005220)	1
*15	10994	Wiper (250001220)	1
16	11096	Clevis Pin (190400001)	1
17	P6269	Hairpin Clip (190600003)	2
18	P6845	Hex Nut (220000105)	2
19	P6590	U Cup (240020106)	1
20	P6842	Plug SAE (200300040)	1
21	P6846	O-Ring (240000231)	2
22	P6847	Plastic Orb Plug (200013106)	2
23	P6589	BU-Washer (240005232)	2

* PARTS PURCHASED IN SAE PACKING KIT #P6301 (PMCK-9200) ONLY.

DE-20-0004 Hydraulic Cylinder Complete - 3 x 24

3 x 24 Hydraulic Cylinder

~~4 x 24 Hydraulic Cylinder~~

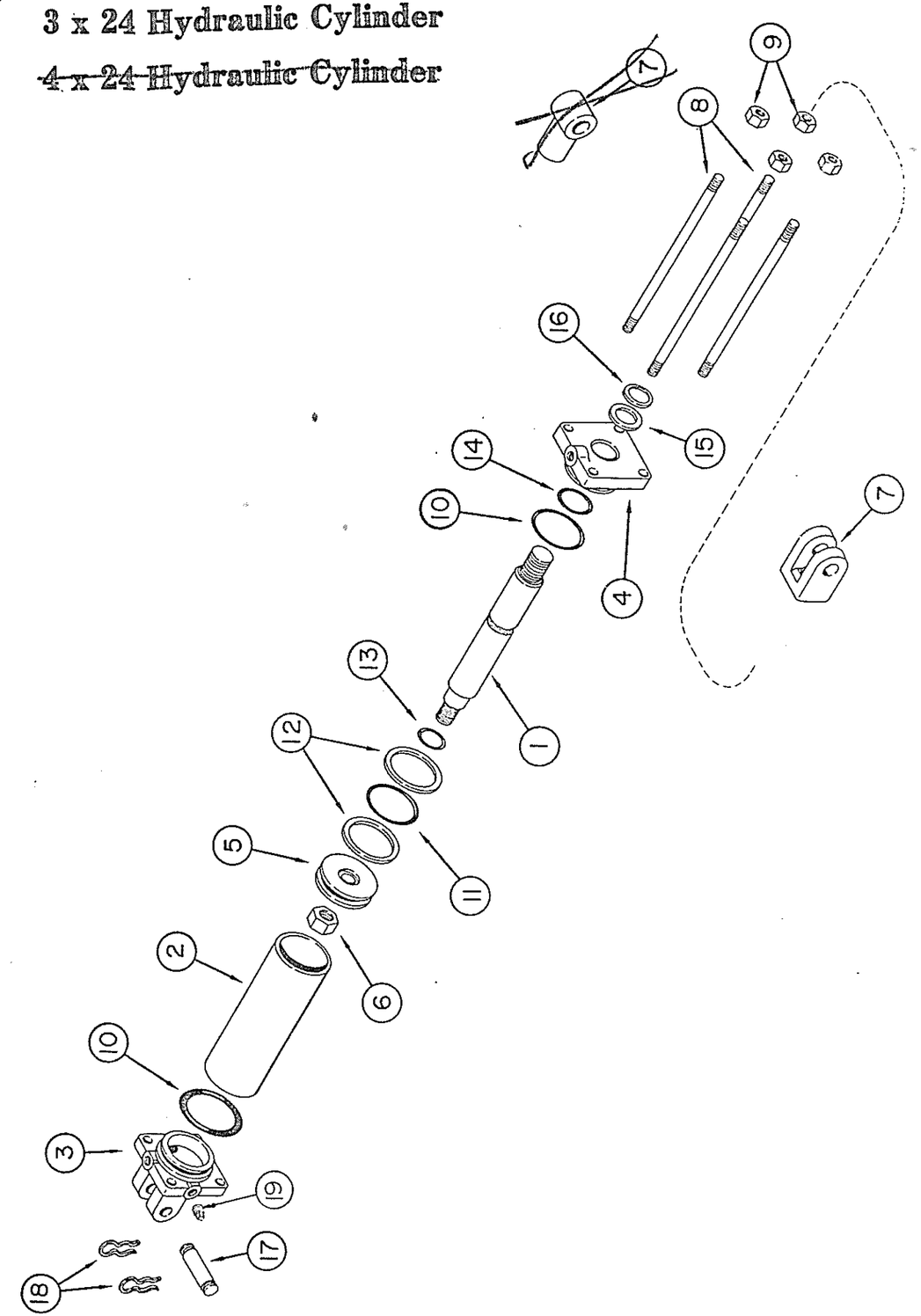

AMCO SUPER-TILL PARTS LIST

HYDRAULIC CYLINDER 4 x 8

4 x 8

REF. NO.	PART NO.	DESCRIPTION (MANUFACTURER'S NO.)	NO. REQ'D
1	10965	Piston Rod (010800005)	1
2	10966	Tube (051900008)	1
3	10952	Butt (141900006)	1
4	10967	Piston Head (081900006)	1
5	10968	Piston (071900006)	1
6	10980	Lock Nut 1" - 14 NF (220000210)	1
7	P6284	Clevis (100000043)	1
8	10970	Tie Rod (170301133)	4
	10976	Seal Repair Kit	
* 9	10958	O-Ring (240001342)	2
*10	10959	O-Ring (240000342)	1
*11	10960	Washer (240005342)	2
*12	10971	O-Ring (240000022)	1
*13	10972	O-Ring (240000222)	1
*14	10973	O-Ring (240005222)	1
*15	10974	Wiper (250001222)	1
16	10956	Clevis Pin 4" Long (190400004)	1
17	P6025	Hairpin Clip (190400002)	2
18	10937	Stroke Control (PMSC-3)	1
19	20476	Assembly Transport Lock	1
20	10910	Roll Pin 5/16 x 2 1/4	2

*PARTS PURCHASED IN SEAL REPAIR KIT #10976 ONLY.

USA58921 Hydraulic Cylinder Complete - 4 x 8

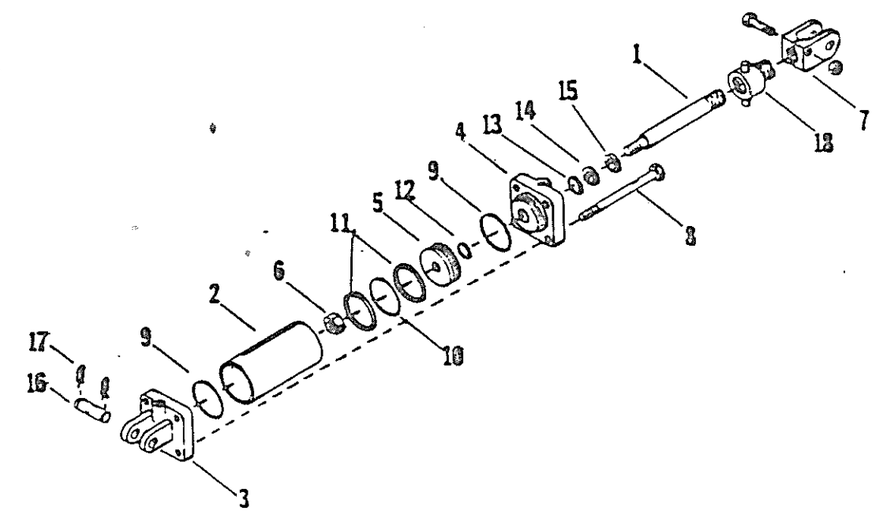

AMCO SUPER-TILL PARTS LIST

HYDRAULIC CYLINDER 3 x 8

REF. NO.	PART NO.	DESCRIPTION	NO. REQ'D
1	P6251	Piston Rod 1 3/8" Dia.	1
2	P6011	Tube	1
3	P6015	Butt	1
4	P6247	Gland	1
5	P6013	Piston	1
6	P2071	Lock Nut 3/4"	1
7	P6023	Clevis Assembly	1
8	P6012	Tie Rod	4
* 9	P6017	O-Ring	2
*10	P6223	O-Ring	1
*11	P6019	BU-Washer	2
*12	P6221	O-Ring	1
*13	P6248	O-Ring	1
*14	P6249	BU-Washer	1
*15	P6250	Wiper	1
16	P6024	Clevis Pin	2
17	P6025	Hairpin Clip	4
18	P3598	Stroke Control	1
19	65283	Cover	1
20	P6248	O-Ring	1
21	P2316	Washer 1" SAE	4

*PARTS USED IN PACKING KIT UA67003.

P6246 Hydraulic Cylinder Complete - 3 x 8

3 x 8

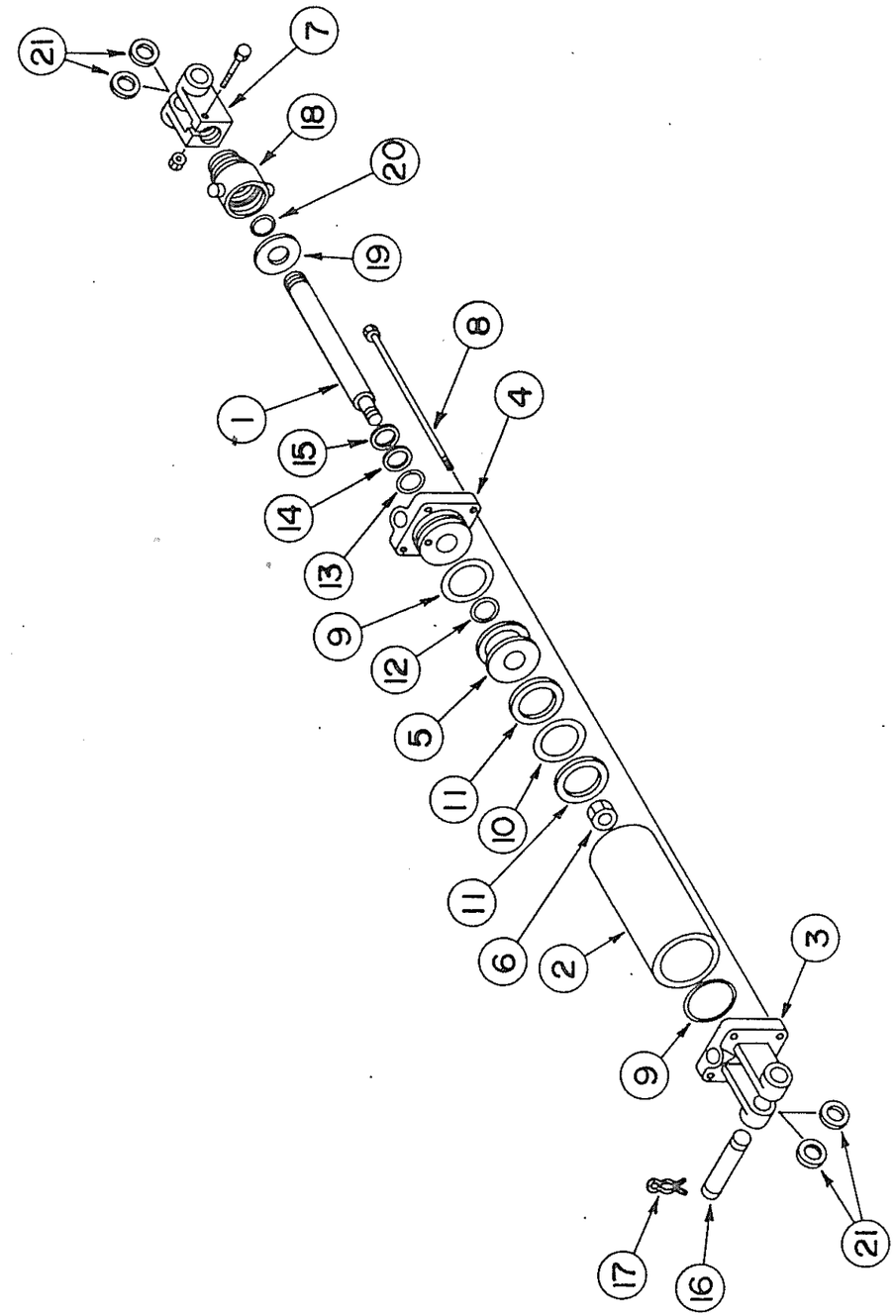

AMCO SUPER-TILL PARTS LIST

HYDRAULIC KITS

REF. NO.	PART NO.	DESCRIPTION	NO. REQ'D ST0-13	ST0-19	ST0-20	ST0-26	ST2-13	ST2-19	ST2-20	ST2-26	ST3-13	ST3-19	ST3-20	ST3-26
1	P6831	Hydraulic Cylinder 3 x 24.....			2	2			2	2			2	2
2	USA65190	Hydraulic Cylinder 3 x 8.....						2	2	2		2	2	2
3	USA58921	Hydraulic Cylinder 4 x 8.....	1	1	1	1	1				1			
4	P6813	Hydraulic Hose 3/8" x 36".....			1			2	3	2		2	3	2
5	P6814	Hydraulic Hose 3/8" x 48".....			1			2	3	2		2	3	2
6	P6815	Hydraulic Hose 3/8" x 60".....				1				1				1
7	P6820	Hydraulic Hose 3/8" x 120".....				1				1				1
8	P6801-1	Elbow 90°-9/16-18 37°M 3/4-16 O Ring M ZP..			2	2			2	2			2	2
9	P6803-1	Tube Tee 9/16-18 37°M, 1/2 NPT M ZP.....						2	2	2		2	2	2
10	P6806-1	Straight Adapter Union 9/16-18 37°M-1/2NPT M ZP						4	4	4		4	4	4
11	P6808-1	Tee Adjustable (2)9/16-18 37°M,(1)3/4-16 O Ring M ZP.....			2	2			2	2			2	2
12	P6810-1	Restrictor Coupling 9/16-18 37°F ZP.....			1	1			1	1			1	1

9/16-18 37° M

3 x 8 LIFT CYLINDERS (ST2 and ST3 - 19', 20', 26')

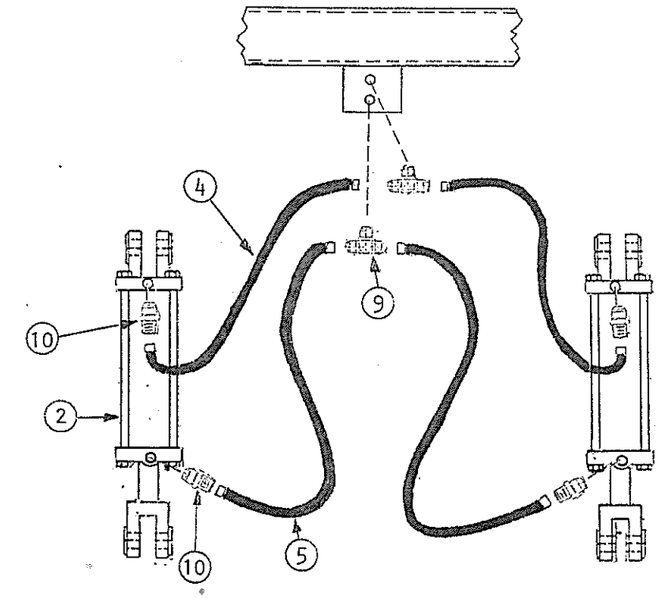

(REAR VIEW)

3 x 24 WING FOLD CYLINDERS (ST0, ST2, ST3 - 20')

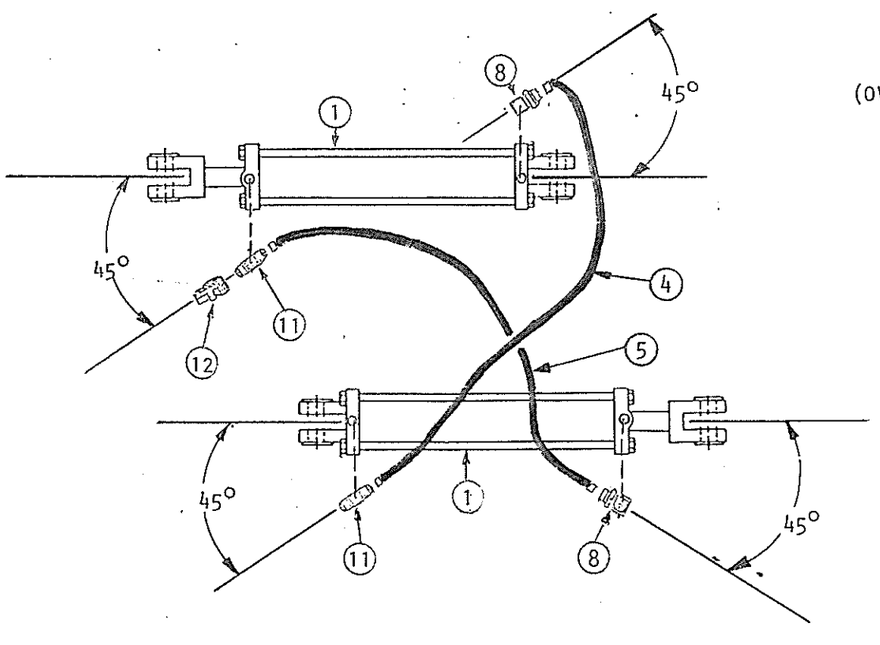

(OVERHEAD VIEW)

3 x 24 WING FOLD CYLINDERS (ST0, ST2, ST3 - 26')

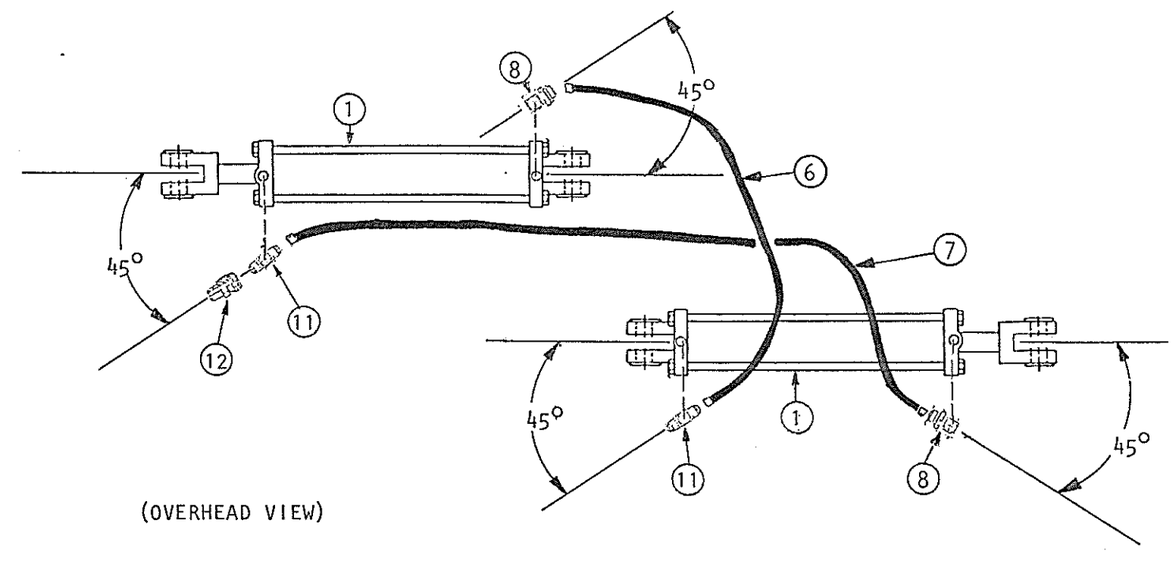

(OVERHEAD VIEW)

AMCO SUPER-TILL PARTS LIST

CROSS TUBES

REF. NO.	PART NO.	DESCRIPTION	NO. REQ'D ST0-13'	ST0-19'	ST0-20'	ST0-26'	ST2-13'	ST2-19'	ST2-20'	ST2-26'	ST3-13'	ST3-19'	ST3-20'	ST3-26'
	102199	Tube 3 x 3 x 63" Long							4	4			6	6
	102200	Tube 3 x 3 x 75" Long							2				3	
	102214	Tube 3 x 3 x 144" Long	1				3				4			
	102201	Tube 3 x 3 x 152" Long								2				3
	102215	Tube 3 x 3 x 216" Long		1				3				4		

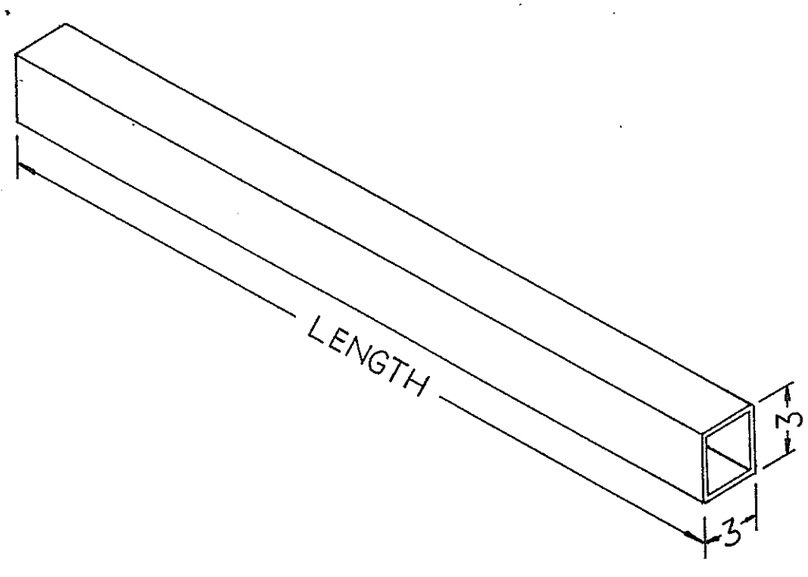

AMCO SUPER-TILL PARTS LIST

SPINDLE, HUB & WHEEL

REF. NO.	PART NO.	DESCRIPTION	NO. REQ'D ST0-13'	ST0-19'	ST0-20'	ST0-26'	ST2-13'	ST2-19'	ST2-20'	ST2-26'	ST3-13'	ST3-19'	ST3-20'
1	12041	Spindle 50mm Dia. x 12" Long	2	2	2	4	2	2	2	4	2	2	2
2	10256	Seal (C/R 22870)	2	2	2	4	2	2	2	4	2	2	2
3	10258	Cone - Inner (Timken 342A)	2	2	2	4	2	2	2	4	2	2	2
4	11297	Hub w/2 cups, 6 hub bolts & nuts	2	2	2	4	2	2	2	4	2	2	2
	10257	Cup - Inner (Timken 332)	2	2	2	4	2	2	2	4	2	2	2
	10261	Cup - Outer (Timken 14276)	2	2	2	4	2	2	2	4	2	2	2
	11299	Hub Bolt 1/2 x 1 7/8 NF	12	12	12	24	12	12	12	24	12	12	12
	11046	Hub Nut 1/2 NF	12	12	12	24	12	12	12	24	12	12	12
5	10262	Cone - Outer (Timken 14137A)	2	2	2	4	2	2	2	4	2	2	2
6	10263	Washer - Spindle 7/8	2	2	2	4	2	2	2	4	2	2	2
7	10264	Nut - Spindle 7/8 NF Slotted	2	2	2	4	2	2	2	4	2	2	2
8	10291	Cotter Pin 5/32 x 1 1/4	2	2	2	4	2	2	2	4	[illegible]	2	2
9	10242	Hub Cap	2	2	2	4	2	2	2	4	2	2	2
10	PA68447	Wheel 15 x 8 - 6 Bolt	2	2	2	4	2			4	2		
10	PA65050	Wheel 15 x 6 - 6 Bolt						2	2			2	2
	DE-05-0052	Sub Bundle Spindle & Hub Complete (Ref.1-9)											

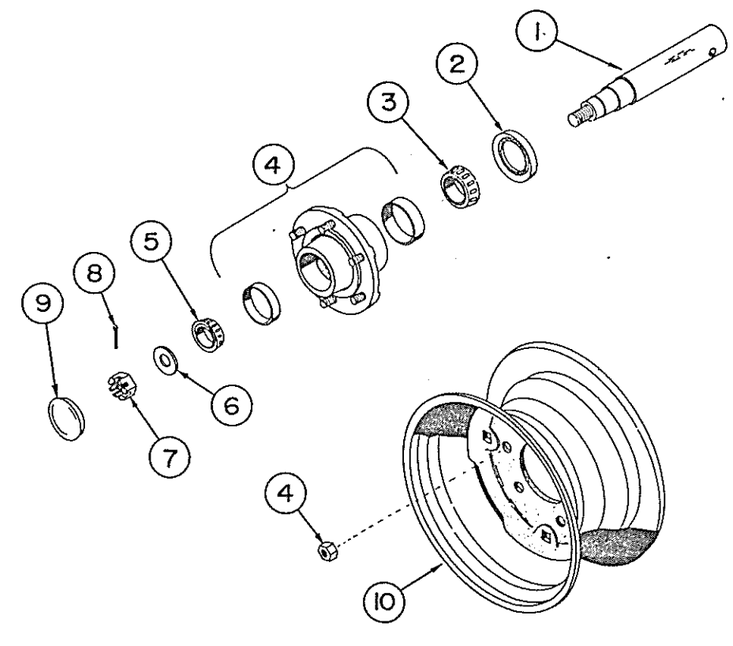

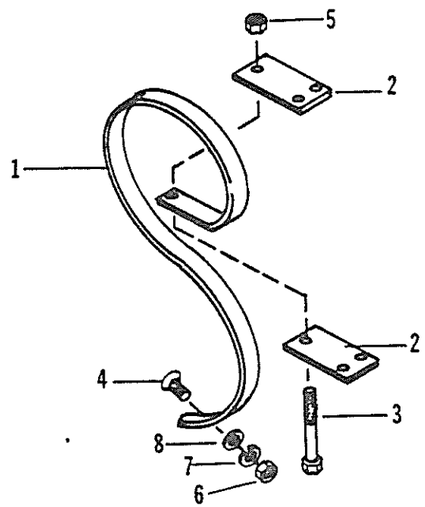

DANISH SHANK — USA70180

Ref. No.	Part No.	Description	Qty.
1	P-6612	Shank	1
2	70248	Plate	2
3	P-4942	H.H.C.S. 3/8" x 4½"	3
4	P-1945	Plow Bolt, Oval Head, 3/8" x 1½", Gr. 5	1
5	P-2094	Nut, Hx. Centerlock, 3/8"	3
6	P-2005	Nut, Hx. 3/8"	1
7	P-2332	Lock Washer, 3/8" Med.	1
8	P-2313	Washer, flat 3/8"	1

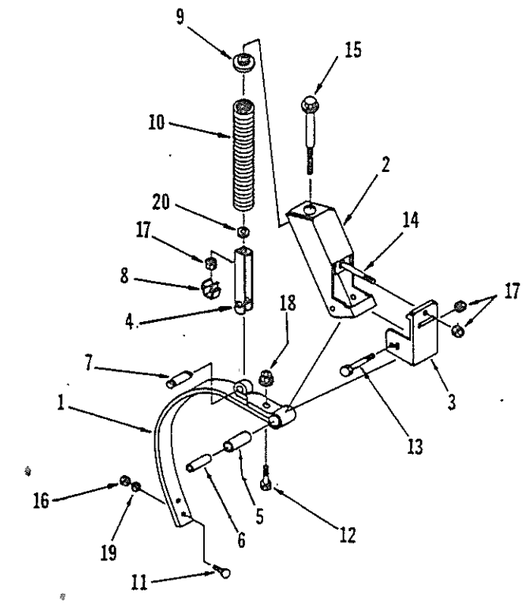

USA69735 SHANK ASSEMBLY

Ref. No.	Part No.	Description	Qty.
	UA69278	Shank Leaf & Sleeve Assy. (consists of Ref. No. 1,5,12,18)	
1	69650	Shank Leaf	1
2	69269	Shank Mount	1
3	69271	Shank Clamp (For 3" Sq. Tube)	1
4	69277	Spring Strap	1
5	69273	Sleeve	1
6	69276	Bushing, 3/4"OD x 2½" lg.	1
7	69268	Spring Retainer	1
8	P-1560	Nut Retainer	1
9	P-6656	Rod Guide	1
10	P-1559	Spring	1
11*	P-1792	Plow Bolt, 3/8" x 1¼" lg.	2
12	P-1881A	H.H.C.S., 1/2" x 1¾" lg, Gr. 5 Spec. Thrd.	1
13	P-1893	H.H.C.S., 1/2" x 3¾" lg., Gr. 5	1
14	P-4946	Carriage Bolt, 1/2" x 4½" (For 3" Sq. Tube)	1
15	P-4945	Shoulder Bolt	1
16*	P-2005	Nut, Hx. 3/8"	2
17	P-2097	Nut, Hx. C.L. 1/2"	3
18	P-6575	Nut, Hx. Fl. TL 1/2", Gr. 8	1
19*	P-2332	Lockwasher, 3/8" Med.	2
20	P-2383	Washer	1

* Not included in USA69735 Shank Assembly

AMCO SUPER-TILL PARTS LIST

REEL & FRAME

REF. NO.	PART NO.	DESCRIPTION	NO. REQ'D.											
			ST0-13'	ST0-19'	ST0-20'	ST0-26'	ST2-13'	ST2-19'	ST2-20'	ST2-26'	ST3-13'	ST3-19'	ST3-20'	ST3-26'
1	20428	Center Reel Frame - 4 Row	1			1	1			1	1			1
2	20429	Center Reel Frame - 6 Row		1				1				1		
3	20381	Center Reel Frame - 2 Row			1				1				1	
4	20382	Wing Reel Frame RH			1	1			1	1			1	1
4	20383	Wing Reel Frame LH			1	1			1	1			1	1
5	20361	Chopper Reel	2	3	3	4	2	3	3	4	2	3	3	4
6	101932	Blade 9/32 x 4 x 74" Long	10	15	15	20	10	15	15	20	10	15	15	20
7	10819	Hex Screw 5/8 x 1 1/4 NF, GR5	50	75	75	100	50	75	75	100	50	75	75	100
8	10752	Lock Nut 5/8 NF, GRB	50	75	75	100	50	75	75	100	50	75	75	100
9	11952	Bearing	4	6	6	8	4	6	6	8	4	6	6	8
10	10587	Hex Screw 1/2 x 2 NC, PLT, GR5	8	8	24	24	8	8	24	24	8	8	24	24
10	10177	Hex Screw 1/2 x 3 NC, PLT, GR5	4	8		4	4	8		4	4	8		4
11	P2097	Lock Nut 1/2 NC, PLT, GRB	12	16	24	28	12	16	24	28	12	16	24	28
12	20474	Spacer Bolt			2	2			2	2			2	2
13	10149	Hex Nut 1 1/4 NC, RH			2	2			2	2			2	2

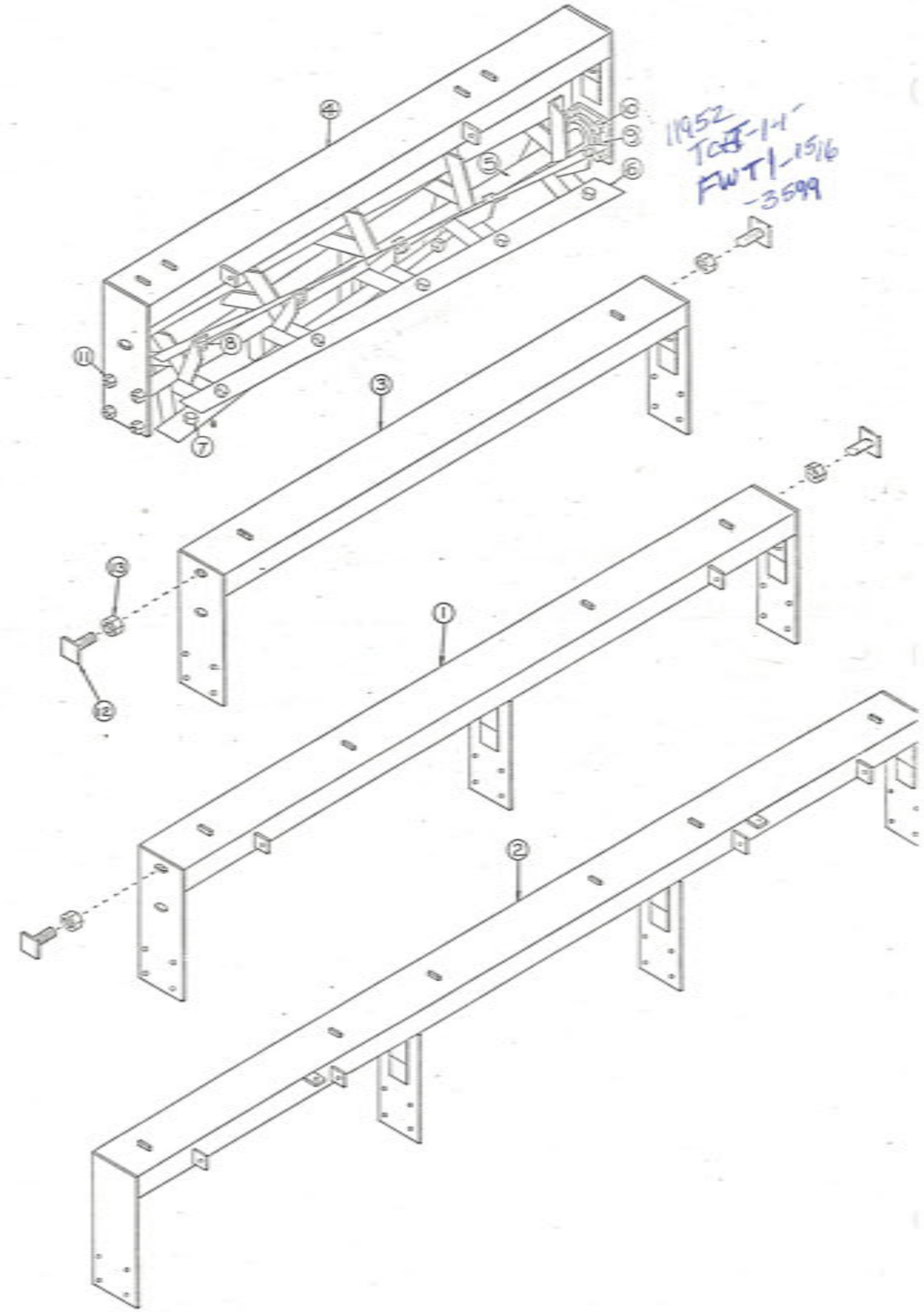

AMCO SUPER-TILL

SPIKE TOOTH HARROW SECTION & LINKS

Ref. No.	Part No.	Description	No. Req'd
1	102028	Link-Pull	4
2	102178	Link - 40 1/2" Long	2
	102027	Link - 51 1/2" Long	2
3	11957	Bushing 3/4 OD x 11 GA 11/32" Long	2
4	10587	Hex Screw 1/2 x 2 NC, PLT, GR2	2
5	10785	Hex Screw 1/2 x 1 1/2 NC, PLT, GR5	2
6	10395	Lock Nut 1/2 NC, PLT, GRB	4
7	11990	Chain - Lift 15 Links - 1/4 Proof Coil 2P	8
8	11987	Flange Lock Nut 3/8 NC, PLT, GRG	8
9	20334	Assy. Harrow Bar No. 1 - 10 Tooth	1
	PA70218	Assy. Harrow Bar No. 1 - 11 Tooth	1
10	20335	Assy. Harrow Bar No. 2 - 10 Tooth	1
	PA70221	Assy. Harrow Bar No. 2 - 11 Tooth	1
11	20336	Assy. Harrow Bar No. 3 - 10 Tooth	1
	PA70222	Assy. Harrow Bar No. 3 - 11 Tooth	1
12	20337	Assy. Harrow Bar No. 4 - 10 Tooth	1
	PA70223	Assy. Harrow Bar No. 4 - 11 Tooth	1
13	20338	Assy. Harrow Bar No. 5 - 10 Tooth	1
	PA70224	Assy. Harrow Bar No. 5 - 11 Tooth	1
14	11971	Link - R	4
15	11972	Link - L	4
16	11973	Bushing 3/4 OD x 11 GA 27/32" Long	18
17	11974	Harrow Tooth	50,55
18	11976	U Bolt 3/8 Dia.	50,55
19	11869	Hex Nut 3/8 Dia.	100,110
20	11975	H. H. C. S. 1/2 - 13 x 1 1/2 ZP	18
21	11854	Hex Nut 1/2 Dia.	18
22	11870	Flat Washer 3/8	36

USA70160 HARROW SECTION - 6' (50 TOOTH) Ref. No. 9 THRU 22

USA70165 HARROW SECTION - 7' (55 TOOTH) Ref. No. 9 THRU 22

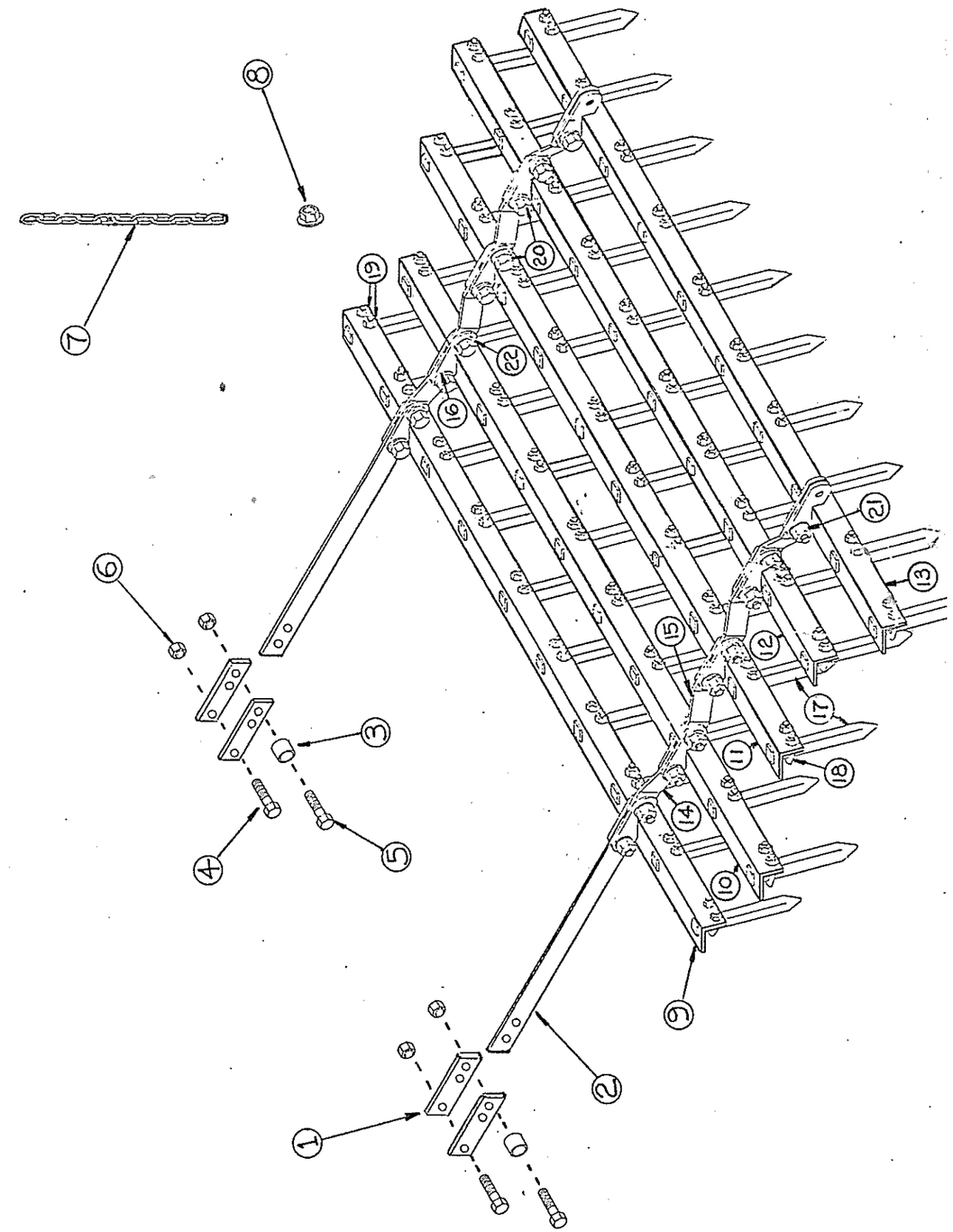

AMCO SUPER-TILL PARTS LIST

OPTIONAL DRAG PIPE

REF.NO.	PART NO.	DESCRIPTION	NO. REQ'D
1	11646	Flange Lock Nut 1/2 NC, PLT, GRG.....	2
2	101935	Bushing 3/4 OD x 11 GA. 1 1/2 Long.....	2
3	10832	Flat Washer 1/2 USS PLT.....	2
4	10097	Hex Screw 1/2 x 2 1/2 NC, PLT, GR5.....	2
5	20482	Assembly Drag Pipe 74 1/2 Long.....	1
5	20483	Assembly Drag Pipe 82 Long.....	1

OPTIONAL DRAG BOARD

REF. NO.	PART NO.	DESCRIPTION	NO. REQ'D
1	11646	Flange Lock Nut 1/2 NC, PLT, GRG.....	4
2	101831	Drag Board - Metal 78 Long.....	1
2	102217	Drag Board - Metal 84 Long.....	1
3	10097	Hex Screw 1/2 x 2 1/2 NC, PLT, GR5.....	4
4	20374	Assembly Drag Board Arm.....	2
5	20373	Assembly Spring Rod.....	2
6	11950	Compression Spring.....	2
7	11647	Flange Lock Nut 5/8 NC, PLT, GRG.....	2
8	P2097-1	Lock Nut 1/2 NC, PLT, GR5.....	4
9	10833	Hex Screw 1/2 x 3 1/2 NC, PLT, GR2.....	2
10	10177	Hex Screw 1/2 x 3 NC, PLT,GR5.....	2
11	20472	Assembly Drag Board Mount.....	2
12	10130	Carr. Screw 5/8 x 5 NC, PLT, GR2.....	4
13	102197	Clamp Plate.....	2
14	P2069-1	Lock Nut 5/8 NC, PLT, GRB.....	4

DRAG PIPE ATTACHMENT

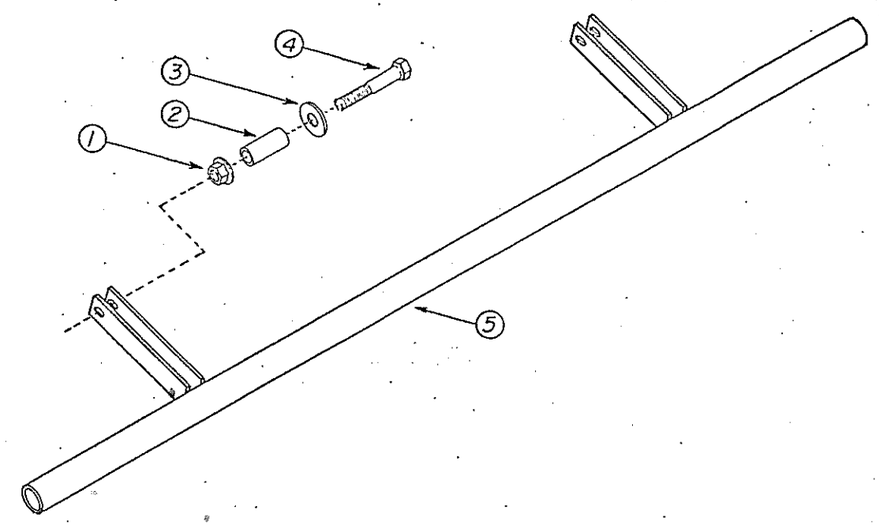

DRAG BOARD ATTACHMENT

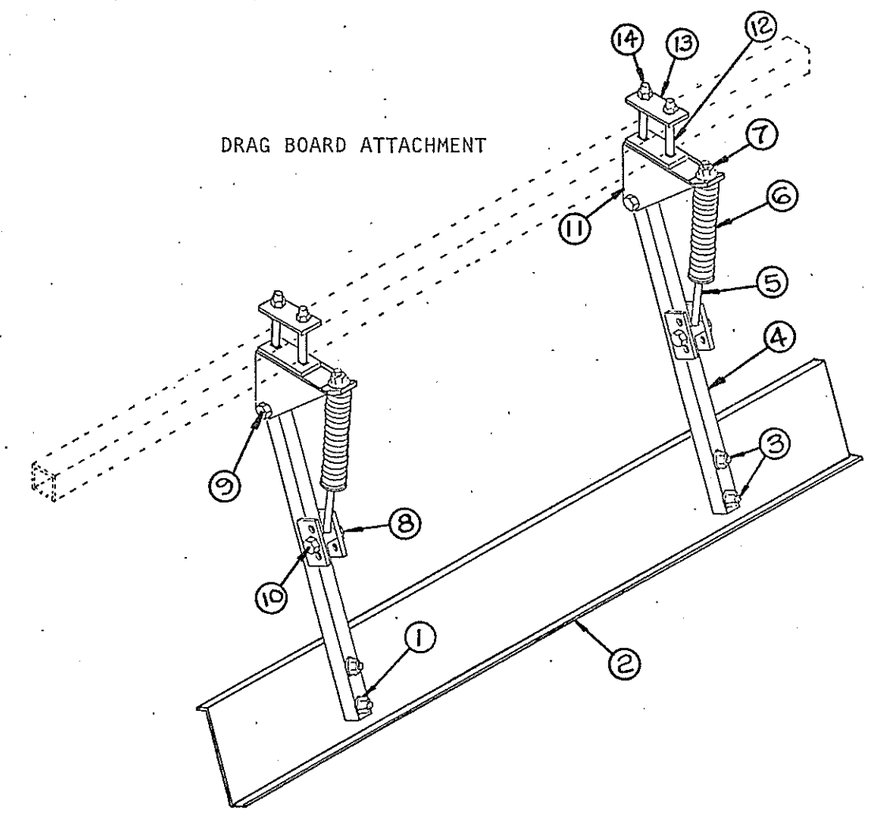

AMCO SUPER-TILL

PARTS LIST

DOUBLE ROLLING BASKET-14
DE-01-0094 (USA 40695)

Ref. No.	Part No.	Description	No. Req'd
2	UA40457	Basket Assembly - R	7
3	UA40466	Basket Assembly - L	7
4	PA40458	Basket Frame Assembly - Inner	7
5	PA40467	Basket Frame Assembly - Outer	7
6	40474	Side Plate - Inner	4
	40476	Side Plate - Outer	4
7	40109	Basket Harrow Tooth - R	42
	40111	Basket Harrow Tooth - L	42
8	P1705	Screw-Hex HD. Cap 5/16 - 1"	40
9	P2036	Nut-Lock 5/16"	40
10	P1312	Spiral Pin 5/16 x 1 3/4	2
11	40741	Main Shaft 1 1/4" Dia. 76 1/16" lg.	2
12	P2626	Pin-Cotter 3/16 x 2	2
13	40126	Retainer Washer	8
14	P2047	Nut-Hex Slotted 1 1/4"	2
15	PA40513	Bearing Plate Assembly	3
16	40473	Shaft Guard	2
17	P1931	Bolt - Carriage 3/8 x 1"	22
18	P5422	Stamping W/zerk	6
19	P5420	Bearing	6
20	P5421	Stamping	6
21	P2332	Washer-Lock 3/8"	22
22	P2005	Nut-Hex 3/8"	22
23	58563	U Bolt	6
24	P2097	Nut-Lock Centerlock 1/2"	12
25	40739	Main Tube 74 5/8" long	1
26	P2328	Mach. Bushing	2

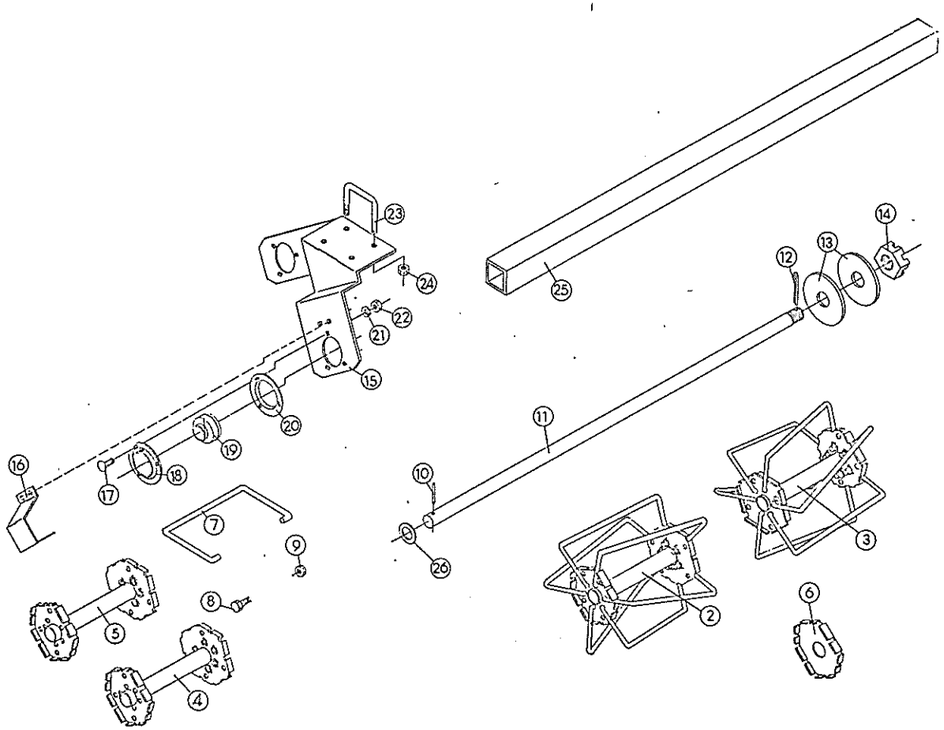

AMCO SUPER-TILL

PARTS LIST

CARRIER ARM ASSEMBLY

DE-01-0095 (USA40935) SINGLE
DE-01-0096 (USA40940) DOUBLE

Ref. No.	Part No.	DESCRIPTION	No Req'd Single	No Req'd Double
25	PA40369	Adjusting Bracket Assembly	1	2
26	40372A	Mounting Plate	1	2
29	P1779	Screw-Hex Hd. Cap 1/2 x 4 Gr.5	2	4
30	P2097	Nut-Lock (center lock) 1/2"	5	10
31	P1897	Screw-Hex Hd. Cap 1/2 x 2 3/4" Gr.5	3	6
32	PA40571	Upper Carrier Arm	1	2
33	PA40368B	Lower Carrier Arm Assembly-Inner	1	2
34	PA40376	Lower Carrier Arm Assembly-Outer	1	2
36	PA40357	Pressure Rod Assembly	1	2
37	P1521	Pressure Spring	1	2
38	40477A	Adjustment Pin	1	2
39	P2622	Hairpin Cotter	2	4
40	P2349	Washer-Cut 5/8" SAE	1	2
41	P2089	Nut-Lock 5/8"	1	2
42	PA40772	Mounting Bracket Assembly	1	2
43	67879	Mounting Bracket	1	2
44	40264A	Adjustment Pin	1	2
45	P4935	Screw-Hex Hd Cap 5/8 x 5" Gr.5	2	4
46	P2314	Washer-Cut 1/2"	2	4
47	P2069	Lock Nut (center lock) 5/8"	2	4

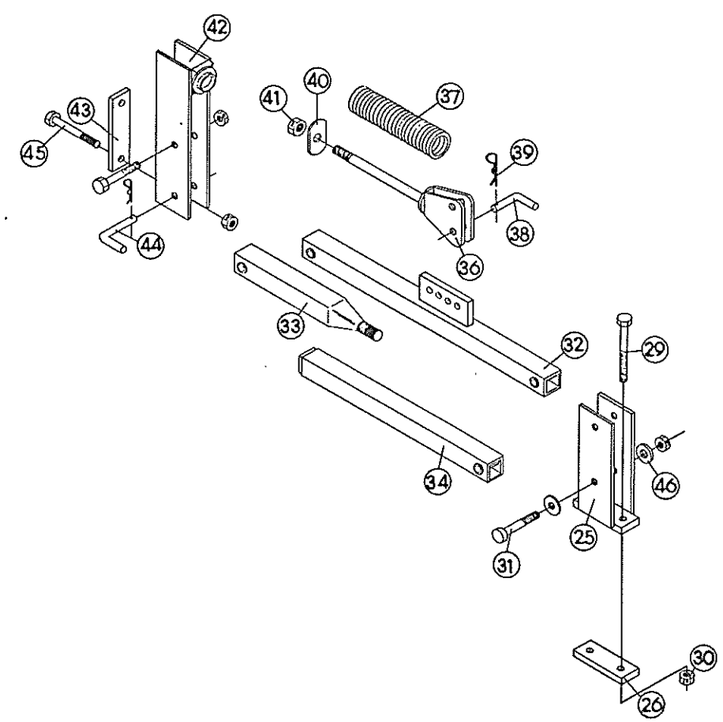

OPTIONAL

AMCO Parking Stand

Ref. No.	Part No.	Description	No. Req'd
1	20265	Assy. Stand - Parking.....	1
2	20524	Assy. Mount - Stand.....	1
3	11986	"U" Bolt 5/8 Dia.....	1
4	10299	Lock Nut 5/8 NC, PL.....	2
5	100683	Lock Pin 3/4 Dia.....	1
6	10317	Klik Pin.....	1

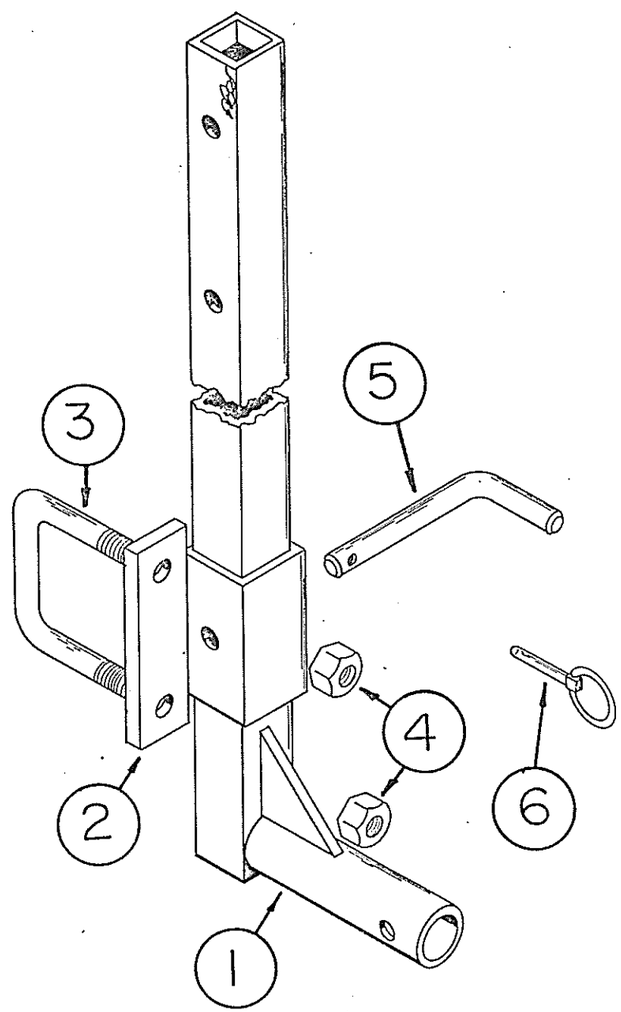

AMCO SUPER-TILL PARTS LIST

OPTIONAL WING LOCK BOLT & NUT

REF. NO.	PART NO.	DESCRIPTION	NO. REQ'D
1	10304	Hex Screw 1 x 6 1/2 NC, PLT.....	2
2	10694	Lock Washer 1" PLT.....	2
3	10695	Hex Nut 1" NC, PLT.....	2

OPTIONAL SAFETY CHAIN

REF. NO.	PART NO.	DESCRIPTION	NO. REQ'D
1	11806	Assembly Safety Chain 5/16".....	1

OPTIONAL DUAL ROCKSHAFT

REF. NO.	PART NO.	DESCRIPTION	NO.REQ'D
1	20484	Assembly Rockshaft - 2 Row.....	1
2	10773	Hex Screw 3/8 x 3 1/2 NC, PLT, GR5.....	4
3	10509	Lock Nut 3/8 NC, PLT, GRB.....	4

OPTIONAL MECHANICAL GAUGE WHEELS

REF. NO.	PART NO.	DESCRIPTION	NO. REQ'D
1	20485	Assembly Gauge Wheel Mount - 3".....	1

DRAWINGS NOT MADE

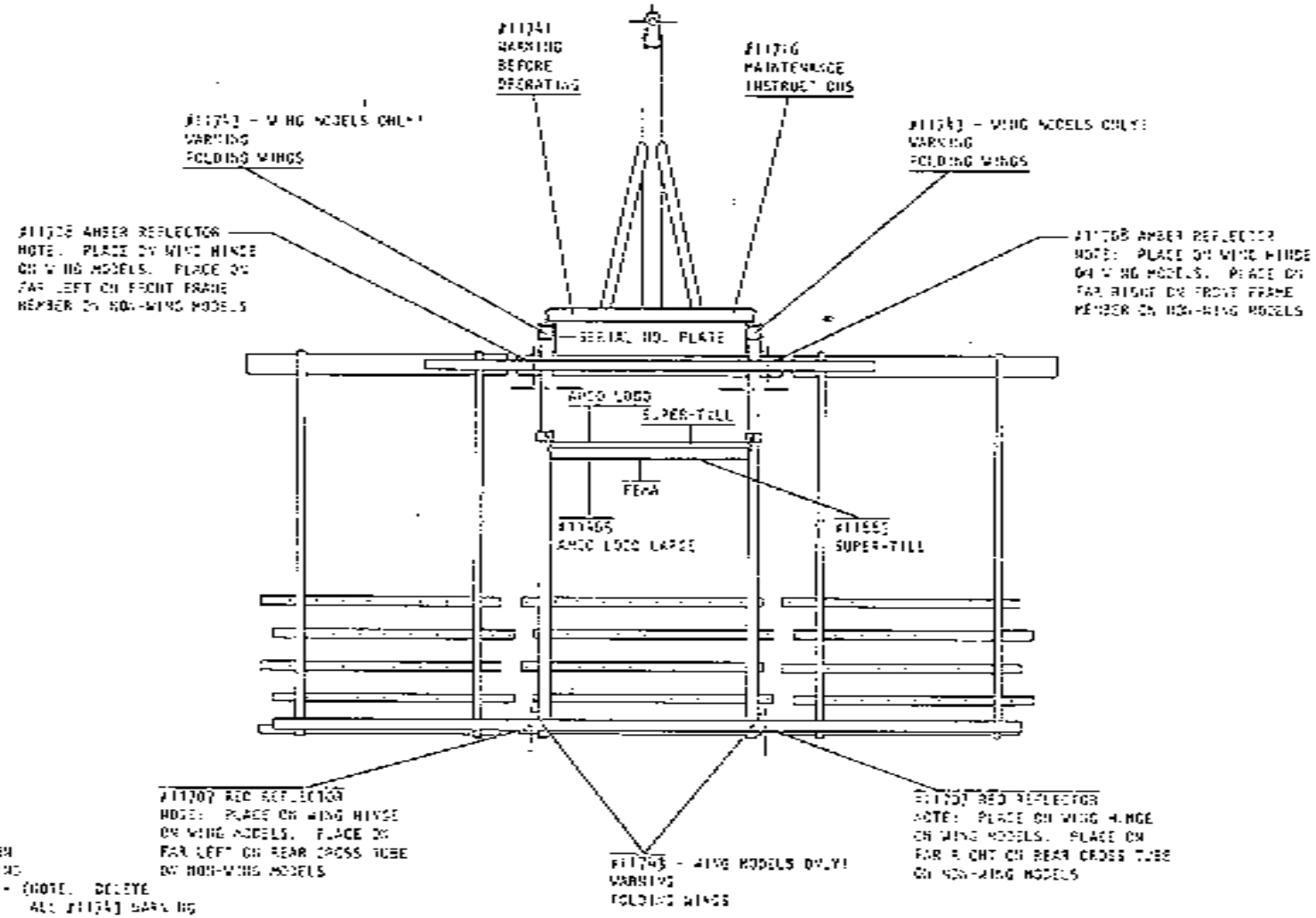

QTY	PART NUMBER	DESCRIPTION
(2)	#11465	AMCO LOGO LARGE
(1)	#11555	FEMA
(2)	#11707	RED REFLECTOR
(2)	#11708	AMBER REFLECTOR
(1)	#11716	MAINTENANCE INSTRUCTION
(1)	#11741	WARNING BEFORE OPERATING
(4)	#11743	WARNING FOLDING WINGS - (NOTE: DELETE ALL #11743 WARNING FOLDING WINGS ON NON-WING MODELS)
(2)	#11559	DECAL, SUPER-TILL

REV.		DWG. NO. 11928	MATERIAL	AMCO PRODUCTS — Portable Elevator Division, Dynamics Corp. of America, Yazoo City, Miss. 39194
REV.		DRAWN BY: HTH	SCALE: 1/32=1"	PART NAME: CHART - DECAL PLACEMENT (SUPER-TILL)
REV.		DATE: 9/1995	APPV'D BY:	